SECTION INL
INTERIOR LIGHTING SYSTEM

CONTENTS

PRECAUTION

PRECAUTIONS

Precaution for Supplemental Restraint System (SRS) "AIR BAG" and "SEAT BELT PRE-TENSIONER"

INFOID:0000000008140813

The Supplemental Restraint System such as “AIR BAG” and “SEAT BELT PRE-TENSIONER”, used along with a front seat belt, helps to reduce the risk or severity of injury to the driver and front passenger for certain types of collision. This system includes seat belt switch inputs and dual stage front air bag modules. The SRS system uses the seat belt switches to determine the front air bag deployment, and may only deploy one front air bag, depending on the severity of a collision and whether the front occupants are belted or unbelted.
Information necessary to service the system safely is included in the “SRS AIR BAG” and “SEAT BELT” of this Service Manual.

WARNING:
Always observe the following items for preventing accidental activation.
- **To avoid rendering the SRS inoperative, which could increase the risk of personal injury or death in the event of a collision that would result in air bag inflation, all maintenance must be performed by an authorized NISSAN/INFINITI dealer.**
- **Improper maintenance, including incorrect removal and installation of the SRS, can lead to personal injury caused by unintentional activation of the system. For removal of Spiral Cable and Air Bag Module, see “SRS AIR BAG”.**
- **Never use electrical test equipment on any circuit related to the SRS unless instructed to in this Service Manual. SRS wiring harnesses can be identified by yellow and/or orange harnesses or harness connectors.**

PRECAUTIONS WHEN USING POWER TOOLS (AIR OR ELECTRIC) AND HAMMERS

WARNING:
Always observe the following items for preventing accidental activation.
- **When working near the Air Bag Diagnosis Sensor Unit or other Air Bag System sensors with the ignition ON or engine running, never use air or electric power tools or strike near the sensor(s) with a hammer. Heavy vibration could activate the sensor(s) and deploy the air bag(s), possibly causing serious injury.**
- **When using air or electric power tools or hammers, always switch the ignition OFF, disconnect the 12V battery, and wait at least 3 minutes before performing any service.**

Precaution Necessary for Steering Wheel Rotation after 12V Battery Disconnect

INFOID:0000000008140814

For vehicle with steering lock unit, if the 12V battery is disconnected or discharged, the steering wheel will lock and cannot be turned.
If turning the steering wheel is required with the 12V battery disconnected or discharged, follow the operation procedure below before starting the repair operation.

OPERATION PROCEDURE

1. Connect both 12V battery cables.
   NOTE:
   Supply power using jumper cables if 12V battery is discharged.
2. Turn the ignition switch to ACC position.
   (At this time, the steering lock will be released.)
3. Disconnect both 12V battery cables. The steering lock will remain released with both 12V battery cables disconnected and the steering wheel can be turned.
4. Perform the necessary repair operation.
5. When the repair work is completed, re-connect both 12V battery cables. With the brake pedal released, turn the ignition switch from ACC position to ON position, then to LOCK position. (The steering wheel will lock when the ignition switch is turned to LOCK position.)
6. Perform All DTC Reading using CONSULT and delete DTC.
   NOTE:
   Multiple DTCs are detected when 12V battery cable is disconnected while ignition switch is in ACC position.

SYSTEM DESCRIPTION

COMPONENT PARTS

INTERIOR LIGHTING SYSTEM

INTERIOR LIGHTING SYSTEM : Component Parts Location

INFOID:0000000008140815

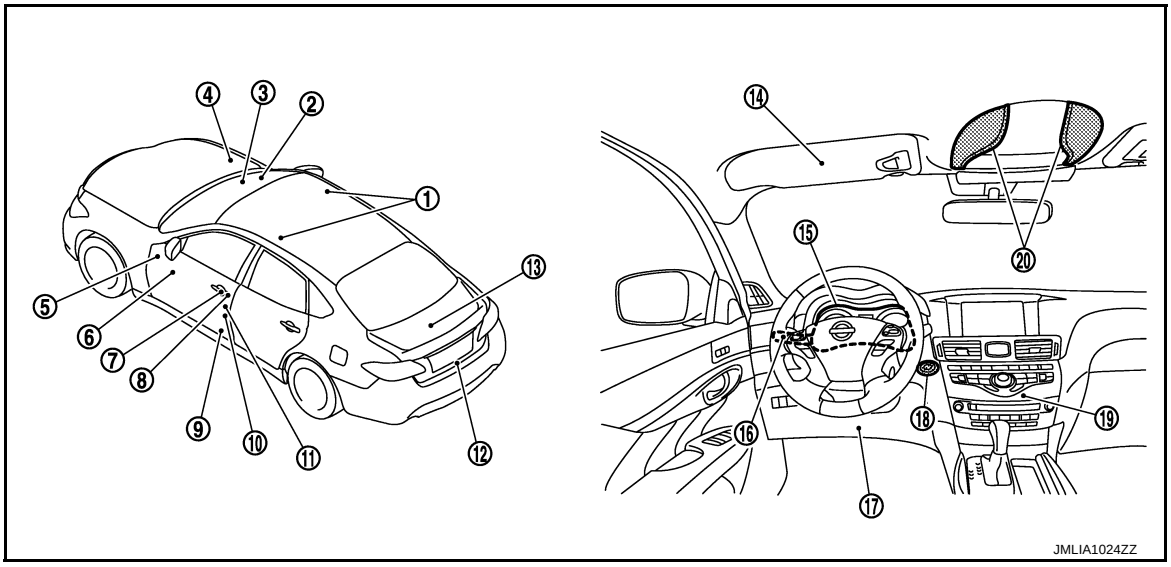

1. Personal lamp
2. Remote keyless entry receiver Refer to DLK-9, "DOOR LOCK SYSTEM : Component Parts Location".
3. Optical sensor
4. IPDM E/R Refer to PCS-5, "IPDM E/R : Component Parts Location".
5. BCM Refer to BCS-4, "BODY CONTROL SYSTEM : Component Parts Location".
6. Door lock and unlock switch
7. Outside handle lamp
8. Front door request switch (driver side)
9. Step lamp
10. Door switch
11. Front door lock assembly (driver side) (door key cylinder switch, unlock sensor)
12. Trunk closure assembly
13. Trunk room lamp
14. Vanity mirror lamp
15. Combination meter
16. Combination switch
17. Foot lamp
18. Push-button ignition switch
19. AV control unit
    - Base audio without navigation: Refer to AV-11, "Component Parts Location".
    - BOSE audio with navigation: Refer to AV-128, "Component Parts Location".
20. Map lamp

INTERIOR LIGHTING SYSTEM : Component Description

INFOID:0000000008140816

Part	Description
BCM	Controls the interior lighting system.
IPDM E/R	Controls the integrated relay according to the request signal from BCM (via CAN communication).
Remote keyless entry receiver	Receives the lock/unlock signal from Intelligent Key.
Combination switch (Lighting & turn signal switch)	Refer to BCS-7, "COMBINATION SWITCH READING SYSTEM : System Description".

Part	Description
• Door lock and unlock switch • Door request switch • Door key cylinder switch	Inputs the lock/unlock signal to BCM.
Door switch	Inputs the door switch signal to BCM.
Trunk closure assembly	Inputs the trunk lid open/close status signal to BCM.
Unlock sensor	Detects door lock condition of driver side door.
Optical sensor	Refer to EXL-9, "EXTERIOR LIGHTING SYSTEM : Component Description".

SYSTEM

INTERIOR ROOM LAMP CONTROL SYSTEM

INTERIOR ROOM LAMP CONTROL SYSTEM : System Diagram

INFOID:0000000008140817

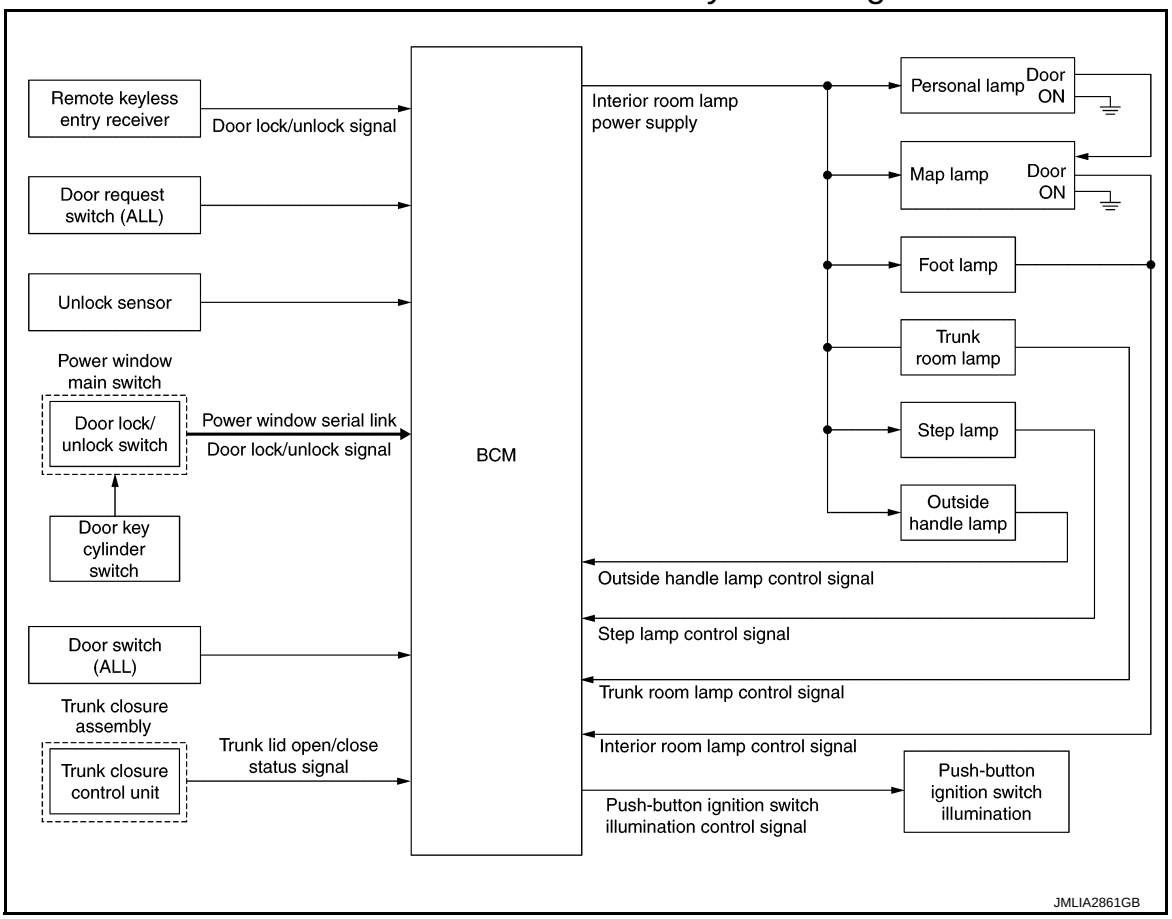

INTERIOR ROOM LAMP CONTROL SYSTEM : System Description

INFOID:0000000008140818

OUTLINE

- Interior room lamps* are controlled by interior room lamp timer control function of BCM.
  *: Map lamp, foot lamp and personal lamp (when map lamp switch and personal lamp switch are in DOOR position).
- Step lamp is controlled by step lamp control function of BCM.
- Trunk room lamp is controlled by trunk room lamp control function of BCM.
- Outside handle lamp is controlled by outside handle lamp timer control function of BCM.
- Push-button ignition switch illumination is controlled by the push-button ignition switch illumination control function of BCM.
- Interior room lamps and outside handle lamp are illuminated by welcome light function of Intelligent Key system. Refer to DLK-22, "WELCOME LIGHT FUNCTION : System Description".

INTERIOR ROOM LAMP TIMER CONTROL

Interior Room Lamp Timer Basic Operation

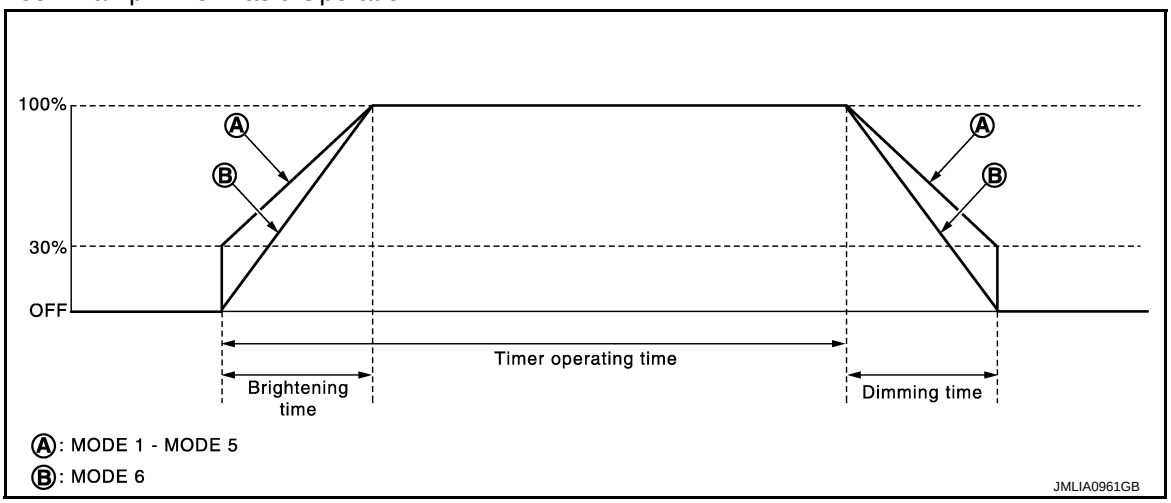

NOTE:
A: Sets the interior room lamp gradual brightening and dimming time.
B: Gradually dims from 100% to 0% and gradually brightens 0% to 100% in 1 second.

- The interior room lamp turns ON and OFF (gradual brightening and dimming) by the interior room lamp timer.
- BCM judges the vehicle condition with the following items. It activates the interior room timer.
  - Ignition switch status
  - Door switch signal
  - Door lock/unlock signal (Remote keyless entry receiver, each door request switch, door key cylinder switch, door lock/unlock switch)

NOTE:
Each function of interior room lamp timer can be set by CONSULT. Refer to INL-14, "INT LAMP : CONSULT Function (BCM - INT LAMP)".

Interior Room Lamp ON Operation

- BCM always turns the interior room lamp ON when any door opens.
- When all doors are closed, and any all door unlock operation is performed or ignition switch is turned OFF, BCM brightens interior room lamp to 30% brightness and maintains 30% brightness until any door opens.
- BCM activates the interior room timer in any of the following conditions to turn the interior room lamp ON for a period of time.
  - Any door opens before all doors close.
  - Ignition switch is turned ON → OFF.
  - Any door unlock signal is detected when all doors close with ignition switch OFF.

NOTE:
The timer is restarted if new condition is input during the timer operating time.

Interior Room Lamp OFF Operation

BCM stops the timer in any of the following conditions to turns the interior room lamp OFF.

- The interior room lamp timer operating time is expired with all doors closed.
- Ignition switch position is other than OFF with all doors close.
- Any door lock operation is detected with all doors close.

TRUNK ROOM LAMP CONTROL

BCM controls the trunk room lamp (ground-side) to turn ON when trunk lid is open.

STEP LAMP CONTROL

BCM controls the step lamp (ground-side) to turn ON with any door switch ON.

OUTSIDE HANDLE LAMP TIMER CONTROL

Outside Handle Lamp Timer Basic Operation

- BCM controls the ground to turn the outside handle lamp ON.
- The outside handle lamp turns ON and OFF by the outside handle lamp timer.
- BCM judges the vehicle condition with the following items. It activates the outside handle lamp timer.
  - Ignition switch status
  - Door switch signal
  - Door lock/unlock signal (remote keyless entry receiver, each door request switch)

- Driver side door lock status

Outside Handle Lamp ON Operation
BCM activates the outside handle lamp timer in any of the following conditions to turn the outside handle lamp ON for a period of time.
• Any door opens.
• Any door opens before all doors close.
• Ignition switch is turned ON → OFF.
• Door unlock signal by remote keyless entry receiver or each door request switch is detected.
• Driver side door is locked
NOTE:
The timer is restarted if new condition is input during the timer operating time.

Outside Handle Lamp OFF Operation
BCM stops the timer in any of the following conditions to turns the outside handle lamp OFF.
• The outside handle lamp timer operating time is expired.
• The interior room lamp OFF conditions.
• The interior room lamp timer operating time is expired.

PUSH-BUTTON IGNITION SWITCH ILLUMINATION CONTROL

Push-button Ignition Switch Illumination Basic Operation
BCM controls the ON/OFF status of push-button ignition switch illumination according to vehicle status.

Heart Beat Operation
BCM repeats brightening and dimming operation of push-button ignition switch illumination when any of the following conditions are satisfied.
• Welcome light function operates.
• When ignition switch is OFF and any of the following conditions are satisfied.
- Driver door changes from closed to open
- Intelligent Key ID comparison is OK and driver side door changes from open to closed
- ID comparison by Intelligent Key transponder is OK
- Driver door is unlocked

Illumination ON Operation
When ignition switch is change from OFF to ON, push-button ignition switch illumination turns ON.

Dimming Operation
When ignition switch is change from ON to OFF, driver side is open and driver side door unlocked, push-button ignition switch illumination dims to 50% brightness.

Illumination OFF Operation
Push-button ignition switch illumination turns OFF when ignition switch turns OFF, while push-button ignition switch illumination is in ON status.
When push-button ignition switch illumination is at 50% brightness or, when in heartbeat status any of the following conditions are satisfied, push-button ignition switch illumination turns OFF.
• Driver side door from unlock to lock.
• 15 seconds after start of heartbeat operation.
• When welcome light function is not operating and any on the following conditions is satisfied.
- Driver side door is closed
- Intelligent Key ID comparison is NG
- Comparison of Intelligent Key ID by transponder is NG

INTERIOR ROOM LAMP BATTERY SAVER SYSTEM

INTERIOR ROOM LAMP BATTERY SAVER SYSTEM : System Diagram

INFOID:0000000008140819

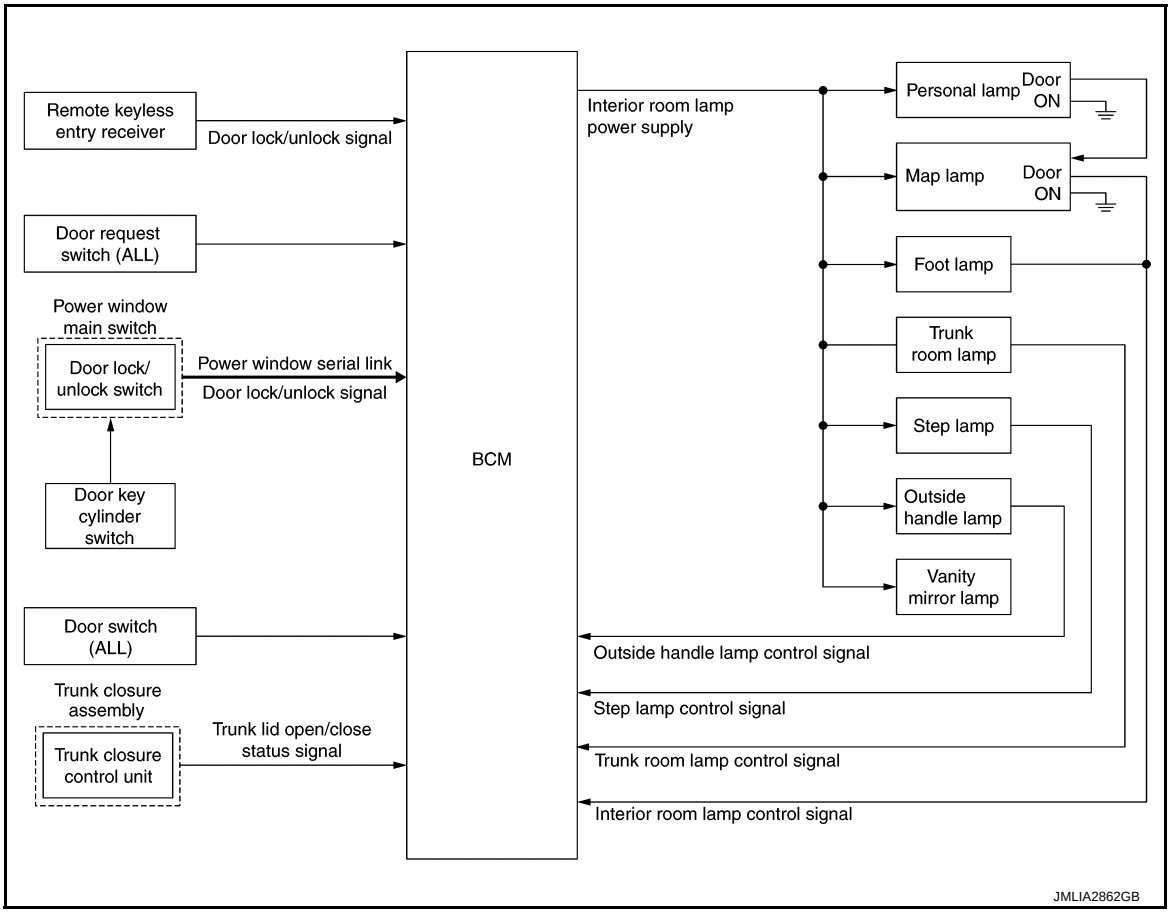

INTERIOR ROOM LAMP BATTERY SAVER SYSTEM : System Description

INFOID:0000000008140820

OUTLINE

- Interior room lamp battery saver is controlled by BCM.
- BCM turns applicable lamps OFF depending on the vehicle condition. This function prevents the 12V battery from over-discharging if the driver neglect turning OFF the any lamps.

Applicable lamps

- Map lamp
- Personal lamp
- Foot lamp
- Trunk room lamp
- Step lamp
- Outside handle lamp
- Vanity mirror lamp

INTERIOR ROOM LAMP BATTERY SAVER FUNCTION

- When the ignition switch is turned is other position than ON, BCM operates the timer for a period of time to cut the interior room lamp power supply.
- BCM restart the timer when any of the following signals changes while operating the timer.
- Ignition switch status
- Door switch signal (ALL)
- Trunk lid open/close status signal
- Door lock/unlock signal (remote keyless entry receiver, each door request switch, door lock and unlock switch, door key cylinder switch)
- BCM provides the interior room lamp power supply continuously when the ignition switch position is ON.
- When welcome light function operates.

NOTE:

Each function of interior room lamp battery saver can be set by CONSULT. Refer to INL-15, "BATTERY SAVER : CONSULT Function (BCM - BATTERY SAVER)".

ILLUMINATION CONTROL SYSTEM

ILLUMINATION CONTROL SYSTEM : System Diagram

INFOID:0000000008140821

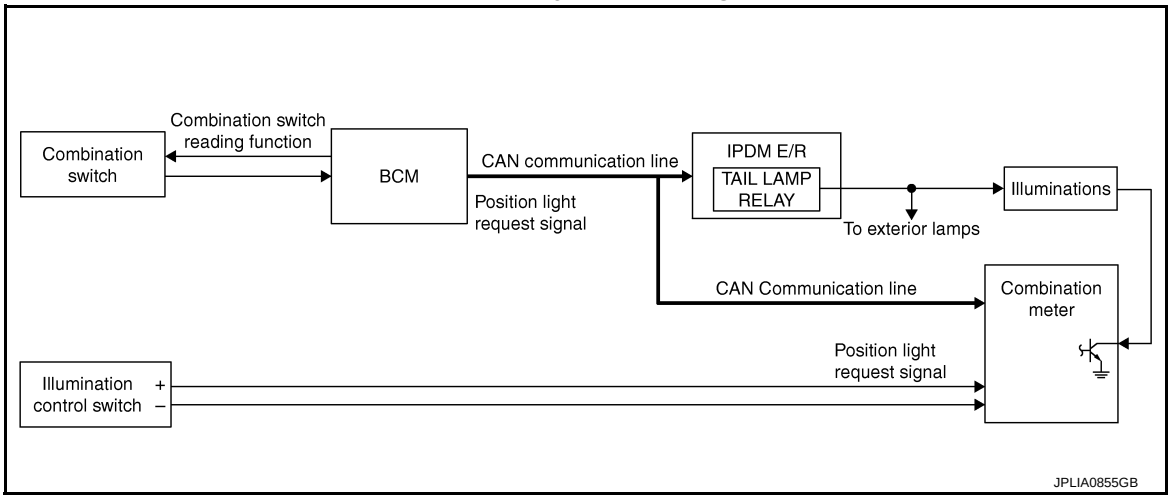

ILLUMINATION CONTROL SYSTEM : System Description

INFOID:0000000008140822

OUTLINE

Each illumination lamp is controlled by each function of BCM and IPDM E/R.

Control by BCM
- Combination switch reading function
- Headlamp control function

Control by IPDM E/R
- Relay control function

Control by combination meter
- Meter illumination control function (Refer to MWI-19, "METER ILLUMINATION CONTROL : System Description".)

ILLUMINATION CONTROL

- BCM detects the combination switch condition by the combination switch reading function.
- BCM transmits position light request signal to IPDM E/R and combination meter according to tail lamp ON condition.

Tail lamp ON condition
- Lighting switch 1ST
- Lighting switch 2ND
- Lighting switch AUTO, and the auto light function ON judgment (With auto light system)
- IPDM E/R turns the integrated tail lamp relay ON according to position light request signal. It provides the power supply to each illumination lamp.
- Combination meter enters in the nighttime mode according to position light request signal. Under the nighttime mode the combination meter controls the illuminance by controlling the each illumination lamp (ground side).

AUTO LIGHT ADJUSTMENT SYSTEM

AUTO LIGHT ADJUSTMENT SYSTEM : System Diagram

INFOID:0000000008140823

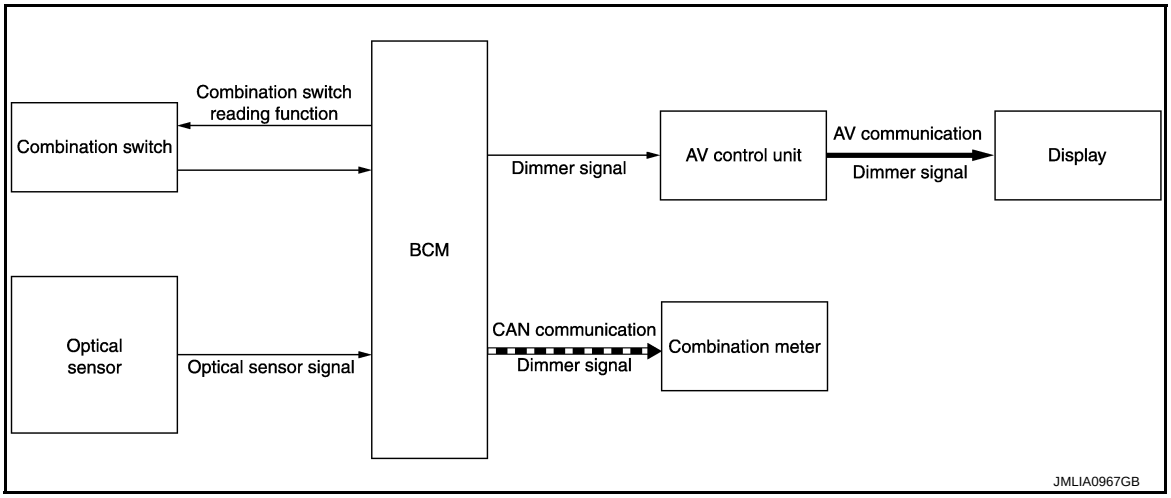

AUTO LIGHT ADJUSTMENT SYSTEM : System Description

INFOID:0000000008140824

OUTLINE

Auto light adjustment system is controlled by each function of BCM, combination meter and AV control unit

Control by BCM
- Auto light system
- Auto light adjustment system

AUTO LIGHT ADJUSTMENT SYSTEM

Description
- BCM supplies voltage to the optical sensor when the ignition switch is turned ON or ACC.
- Optical sensor converts outside brightness (lux) to voltage and transmits the optical sensor signal to BCM.
- BCM judges dims/brightness of combination meter and display according to brightness outside the vehicle, when ignition switch is ON.
- BCM transmits dimmer signal to combination meter via CAN communication, according to auto light adjustment conditions. Dimmer signal is also transmitted to AV control unit.

NOTE:
As to dims/brightness timing, the sensitivity depends on settings. The settings can be changed with CONSULT. Refer to EXL-26, "HEADLAMP : CONSULT Function (BCM - HEAD LAMP)".

DIAGNOSIS SYSTEM (BCM)

COMMON ITEM

COMMON ITEM : CONSULT Function (BCM - COMMON ITEM)

INFOID:0000000008486006

APPLICATION ITEM

CONSULT performs the following functions via CAN communication with BCM.

Diagnosis mode	Function Description
Work Support	Changes the setting for each system function.
Self Diagnostic Result	Displays the diagnosis results judged by BCM.
CAN Diag Support Monitor	Monitors the reception status of CAN communication viewed from BCM.
Data Monitor	The BCM input/output signals are displayed.
Active Test	The signals used to activate each device are forcibly supplied from BCM.
Ecu Identification	The BCM part number is displayed.
Configuration	• Read and save the vehicle specification. • Write the vehicle specification when replacing BCM.

SYSTEM APPLICATION

BCM can perform the following functions for each system.

NOTE:

It can perform the diagnosis modes except the following for all sub system selection items.

×: Applicable item

System	Sub system selection item	Diagnosis mode		
		Work Support	Data Monitor	Active Test
Door lock	DOOR LOCK	×	×	×
Rear window defogger	REAR DEFOGGER		×	×
Warning chime	BUZZER		×	×
Interior room lamp timer	INT LAMP	×	×	×
Exterior lamp	HEAD LAMP	×	×	×
Wiper and washer	WIPER	×	×	×
Turn signal and hazard warning lamps	FLASHER	×	×	×
—	AIR CONDITONER*		×	×
• Intelligent Key system • Engine start system	INTELLIGENT KEY	×	×	×
Combination switch	COMB SW		×	
Body control system	BCM	×		
IVIS - NATS	IMMU	×	×	×
Interior room lamp battery saver	BATTERY SAVER	×	×	×
Trunk lid open	TRUNK		×	
Vehicle security system	THEFT ALM	×	×	×
RAP system	RETAINED PWR		×	
Signal buffer system	SIGNAL BUFFER		×	×
—	AIR PRESSURE MONITOR*	×	×	×

*: This item is not used.

FREEZE FRAME DATA (FFD)

The BCM records the following vehicle condition at the time a particular DTC is detected, and displays on CONSULT.

CONSULT screen item	Indication/Unit	Description	
Vehicle Speed	km/h	Vehicle speed of the moment a particular DTC is detected	
Odo/Trip Meter	km	Total mileage (Odometer value) of the moment a particular DTC is detected	
Vehicle Condition	SLEEP>LOCK	Power position status of the moment a particular DTC is detected*	While turning BCM status from low power consumption mode to normal mode (Power supply position is “LOCK”)
	SLEEP>OFF		While turning BCM status from low power consumption mode to normal mode (Power supply position is “OFF”.)
	LOCK>ACC		While turning power supply position from “LOCK” to “ACC”
	ACC>ON		While turning power supply position from “ACC” to “IGN”
	RUN>ACC		While turning power supply position from “RUN” to “ACC” (Vehicle is stopping and selector lever is except P position.)
	CRANK>RUN		While turning power supply position from “CRANKING” to “RUN” (From cranking up the engine to run it)
	RUN>URGENT		While turning power supply position from “RUN“ to “ACC” (Emergency stop operation)
	ACC>OFF		While turning power supply position from “ACC” to “OFF”
	OFF>LOCK		While turning power supply position from “OFF” to “LOCK”
	OFF>ACC		While turning power supply position from “OFF” to “ACC”
	ON>CRANK		While turning power supply position from “IGN” to “CRANKING”
	OFF>SLEEP		While turning BCM status from normal mode (Power supply position is “OFF”.) to low power consumption mode
	LOCK>SLEEP		While turning BCM status from normal mode (Power supply position is “LOCK”.) to low power consumption mode
	LOCK		Power supply position is “LOCK”
	OFF		Power supply position is “OFF”
	ACC		Power supply position is “ACC”
	ON		Power supply position is “IGN”
	ENGINE RUN		Power supply position is “RUN”
	CRANKING		Power supply position is “CRANKING”
IGN Counter	0 - 39	The number of times that ignition switch is turned ON after DTC is detected • The number is 0 when a malfunction is detected now. • The number increases like 1 → 2 → 3...38 → 39 after returning to the normal condition whenever ignition switch OFF → ON. • The number is fixed to 39 until the self-diagnosis results are erased if it is over 39.	

NOTE:

*: Refer to PCS-34, "POWER DISTRIBUTION SYSTEM : System Description" for details of the power supply position.

INT LAMP

INT LAMP : CONSULT Function (BCM - INT LAMP)

INFOID:0000000008140826

WORK SUPPORT

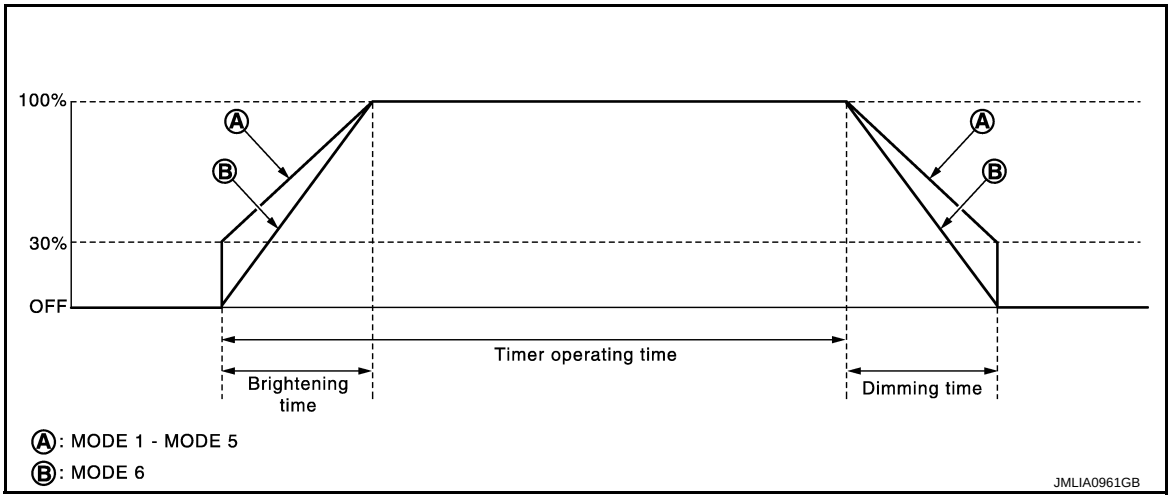

Service item	Setting item	Setting	
SET I/L D-UNLCK INTCON	On*	With the interior room lamp timer function	
	Off	Without the interior room lamp timer function	
ROOM LAMP TIMER SET	MODE 2	7.5 sec.	Sets the interior room lamp ON time. (Timer operating time)
	MODE 3*	15 sec.	
	MODE 4	30 sec.	
ROOM LAMP ON TIME SET	MODE 1	0.5 sec.	Sets the interior room lamp gradual brightening time.
	MODE 2	1 sec.	
	MODE 3	2 sec.	
	MODE 4	3 sec.	
	MODE 5	0 sec.	
	MODE 6*	Gradually brightens from 0% to 100% brightness in 1 second.	
ROOM LAMP OFF TIME SET	MODE 1	0.5 sec.	Sets the interior room lamp gradual dimming time.
	MODE 2	1 sec.	
	MODE 3	2 sec.	
	MODE 4	3 sec.	
	MODE 5	0 sec.	
	MODE 6*	Gradually dims from 100% to 0% in 1 second.	
R LAMP TIMER LOGIC SET	MODE 1*	Interior room lamp timer activates with synchronizing all doors.	
	MODE 2	Interior room lamp timer activates with synchronizing the driver door only.	

*: Factory setting

DATA MONITOR

Monitor item [Unit]	Description
REQ SW-DR [On/Off]	The switch status input from request switch (driver side)
REQ SW-AS [On/Off]	The switch status input from request switch (passenger side)

Monitor item [Unit]	Description
REQ SW-RR [On/Off]	**NOTE:** The item is indicated, but not monitored.
REQ SW-RL [On/Off]	
PUSH SW [On/Off]	Push switch status input from push-button ignition switch
UNLK SEN -DR [On/Off]	Driver door unlock status input from unlock sensor
DOOR SW-DR [On/Off]	The switch status input from front door switch (driver side)
DOOR SW-AS [On/Off]	The switch status input from front door switch (passenger side)
DOOR SW-RR [On/Off]	The switch status input from rear door switch RH
DOOR SW- RL [On/Off]	The switch status input from rear door switch LH
DOOR SW- BK [On/Off]	**NOTE:** The item is indicated, but not monitored.
CDL LOCK SW [On/Off]	Lock switch status input from door lock and unlock switch
CDL UNLOCK SW [On/Off]	Unlock switch status input from door lock and unlock switch
KEY CYL LK-SW [On/Off]	Lock switch status received from key cylinder lock/unlock switch
KEY CYL UN-SW [On/Off]	Unlock switch status received from key cylinder lock/unlock switch
TRNK/HAT MNTR [On/Off]	Trunk lid open/close status received from trunk closure assembly
RKE-LOCK [On/Off]	Lock signal status received from remote keyless entry receiver
RKE-UNLOCK [On/Off]	Unlock signal status received from remote keyless entry receiver

ACTIVE TEST

Test item	Operation	Description
INT LAMP	On	Outputs the interior room lamp control signal to turn the interior room lamps ON. [Map lamp, personal lamp, foot lamp (when applicable lamps switch is in DOOR position.)]
	Off	Stops the interior room lamp control signal to turn the interior room lamps OFF.
STEP LAMP TEST	On	Outputs the step lamp control signal to turn the step lamps ON.
	Off	Stops the step lamp control signal to turn the step lamps ON.

BATTERY SAVER

BATTERY SAVER : CONSULT Function (BCM - BATTERY SAVER)

INFOID:0000000008140827

WORK SUPPORT

Service item	Setting item	Setting	
ROOM LAMP TIMER SET	MODE 1	30 min.	Sets the interior room lamp battery saver timer operating time.
	MODE 2	60 min.	
	MODE 3*	15 min.	
BATTERY SAVER SET	On*	With the exterior lamp battery saver function	
	Off	Without the exterior lamp battery saver function	

*:Factory setting

DATA MONITOR

Monitor item [Unit]	Description
REQ SW-DR [On/Off]	The switch status input from request switch (driver side)
REQ SW-AS [On/Off]	The switch status input from request switch (passenger side)
REQ SW-RR [On/Off]	**NOTE:** The item is indicated, but not monitored.
REQ SW-RL [On/Off]	
PUSH SW [On/Off]	Push switch status input from push-button ignition switch
UNLK SEN-DR [On/Off]	Driver door unlock status input from unlock sensor
DOOR SW-DR [On/Off]	The switch status input from front door switch (driver side)
DOOR SW-AS [On/Off]	The switch status input from front door switch (passenger side)
DOOR SW-RR [On/Off]	The switch status input from rear door switch RH
DOOR SW- RL [On/Off]	The switch status input from rear door switch LH
DOOR SW- BK [On/Off]	**NOTE:** The item is indicated, but not monitored.
CDL LOCK SW [On/Off]	Lock switch status input from door lock and unlock switch
CDL UNLOCK SW [On/Off]	Unlock switch status input from door lock and unlock switch
KEY CYL LK-SW [On/Off]	Lock switch status received from key cylinder lock/unlock switch
KEY CYL UN-SW [On/Off]	Unlock switch status received from key cylinder lock/unlock switch
TRNK/HAT MNTR [On/Off]	Trunk lid open/close status received from trunk closure assembly
RKE-LOCK [On/Off]	Lock signal status received from remote keyless entry receiver
RKE-UNLOCK [On/Off]	Unlock signal status received from remote keyless entry receiver

ACTIVE TEST

Test item	Operation	Description
BATTERY SAVER	Off	Cuts the interior room lamp power supply to turn interior room lamps OFF.
	On	Outputs the interior room lamp power supply to turn interior room lamps ON.*

*: Each lamp switch is in ON position.

ECU DIAGNOSIS INFORMATION

BCM

List of ECU Reference

INFOID:0000000008140828

ECU	Reference
BCM	BCS-34, "Reference Value"
	BCS-54, "Fail-safe"
	BCS-54, "DTC Inspection Priority Chart"
	BCS-55, "DTC Index"

WIRING DIAGRAM

INTERIOR ROOM LAMP CONTROL SYSTEM

Wiring Diagram

INFOID:0000000008140829

For connector terminal arrangements, harness layouts, and alphabets in a ⬡ (option abbreviation; if not described in wiring diagram), refer to GI-13, "Connector Information".

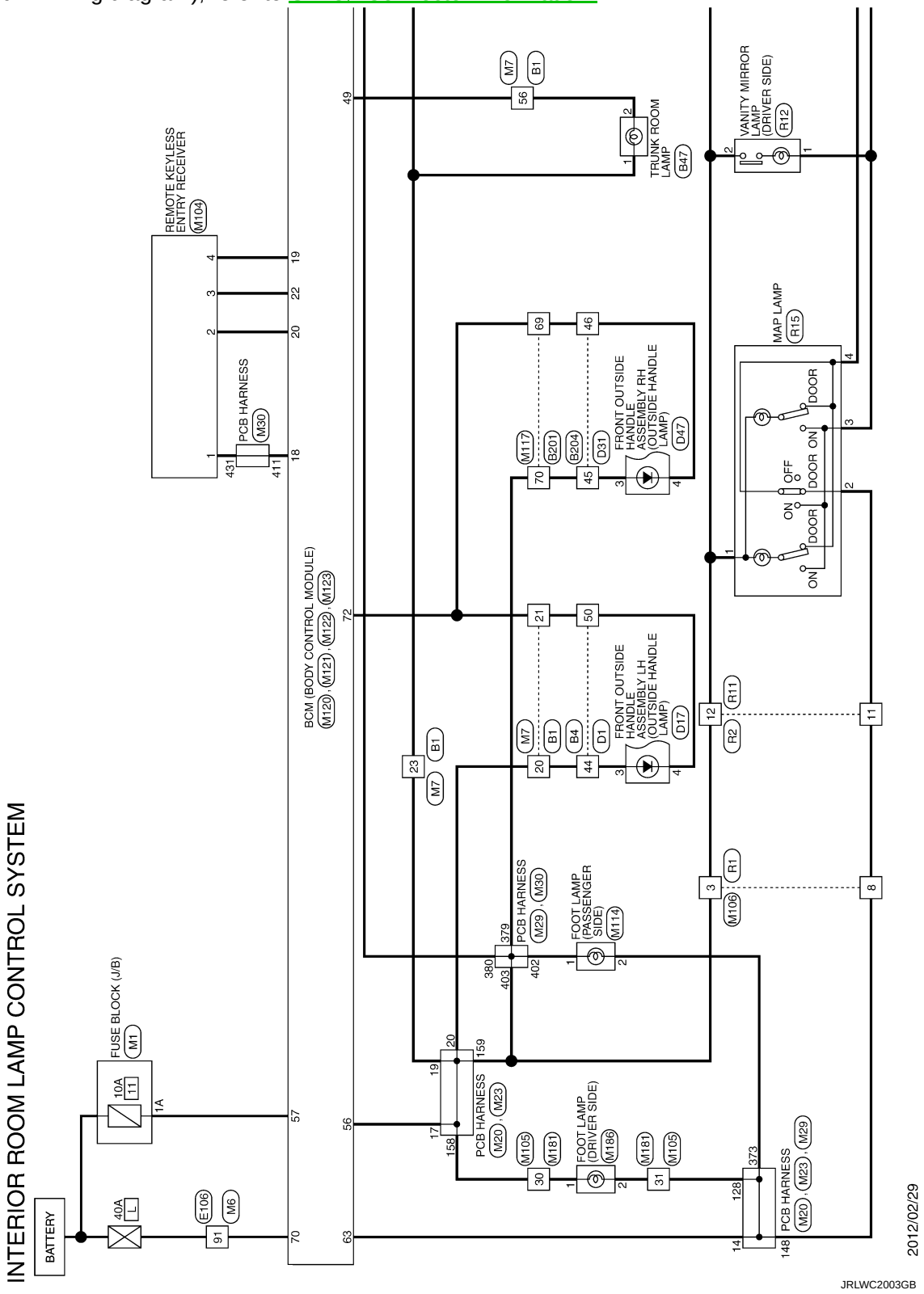

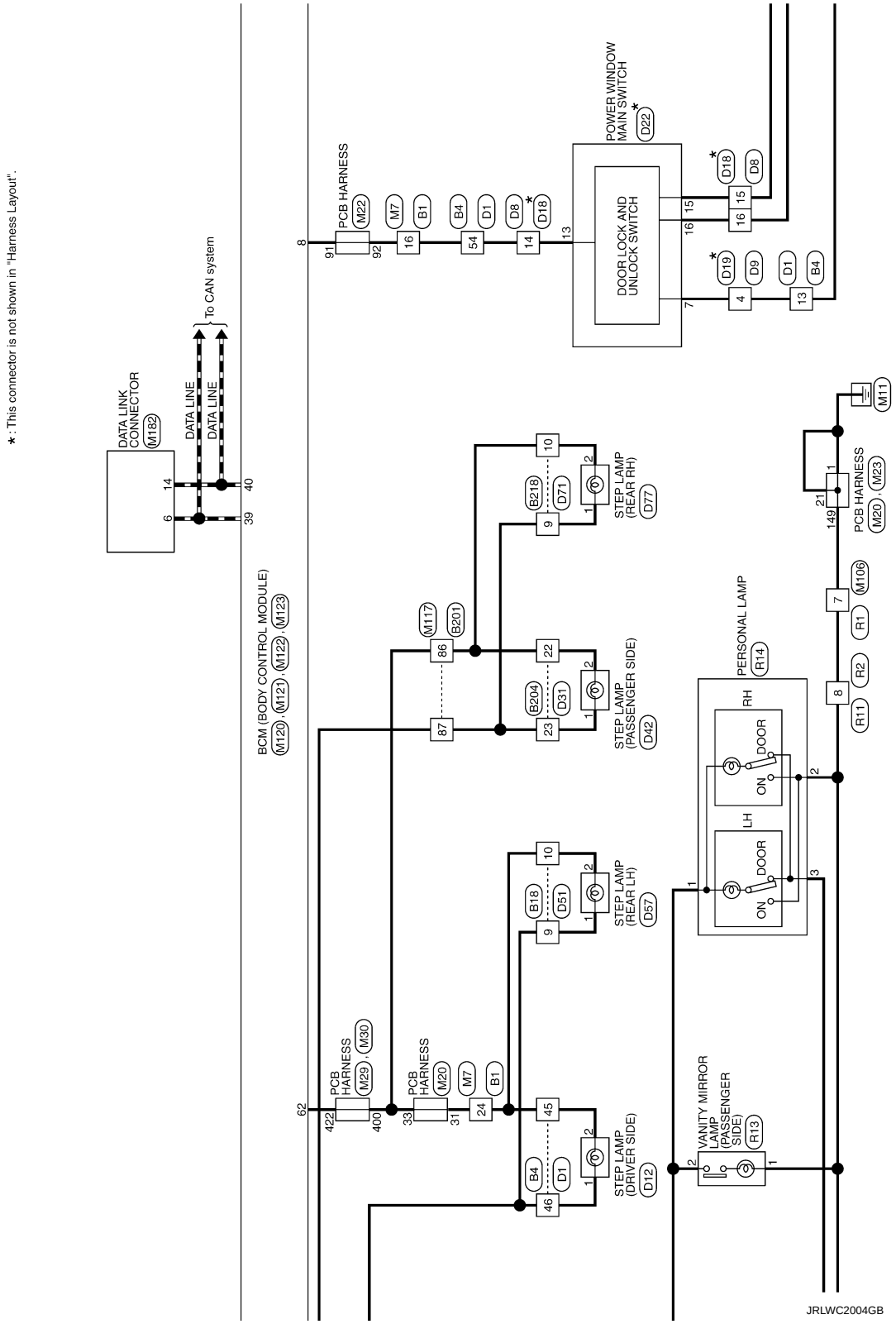
*: This connector is not shown in "Harness Layout".
DATA LINK CONNECTOR
M182
DATA LINE
DATA LINE
To CAN system
BCM (BODY CONTROL MODULE)
M120, M121, M122, M123
PCB HARNESS
M22
M7
B1
B4
D1
D8
D18
POWER WINDOW MAIN SWITCH
D22
DOOR LOCK AND UNLOCK SWITCH
D19
D9
D1
B4
PCB HARNESS
M29, M30
PCB HARNESS
M20
M7
B1
STEP LAMP (DRIVER SIDE)
D12
STEP LAMP (REAR LH)
D57
STEP LAMP (PASSENGER SIDE)
D42
STEP LAMP (REAR RH)
D77
M117
B201
B204
D31
B218
D71
B18
D51
VANITY MIRROR LAMP (PASSENGER SIDE)
R13
PERSONAL LAMP
R14
LH
RH
DOOR
ON
PCB HARNESS
M20, M23
M11
M106
R1
R2
R11
JRLWC2004GB

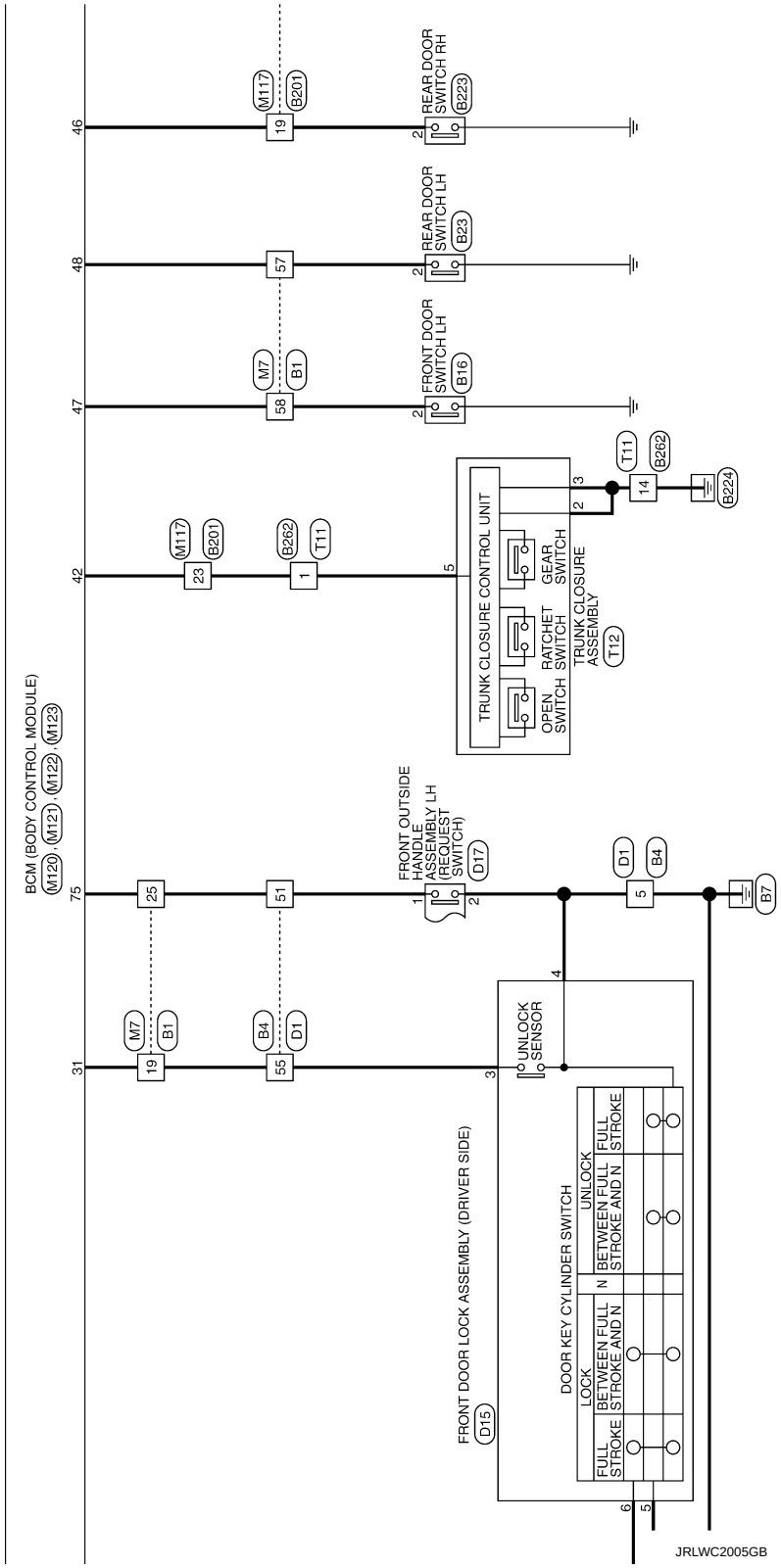
BCM (BODY CONTROL MODULE)
M120, M121, M122, M123
46
48
47
42
75
31
M117
B201
19
REAR DOOR SWITCH RH
B223
57
REAR DOOR SWITCH LH
B23
M7
B1
58
FRONT DOOR SWITCH LH
B16
23
1
T11
B262
TRUNK CLOSURE CONTROL UNIT
OPEN SWITCH
RATCHET SWITCH
GEAR SWITCH
TRUNK CLOSURE ASSEMBLY
T12
14
B224
25
51
FRONT OUTSIDE HANDLE ASSEMBLY LH (REQUEST SWITCH)
D17
5
D1
B4
B7
55
UNLOCK SENSOR
FRONT DOOR LOCK ASSEMBLY (DRIVER SIDE)
D15
DOOR KEY CYLINDER SWITCH
LOCK
UNLOCK
FULL STROKE
BETWEEN FULL STROKE AND N
N
JRLWC2005GB

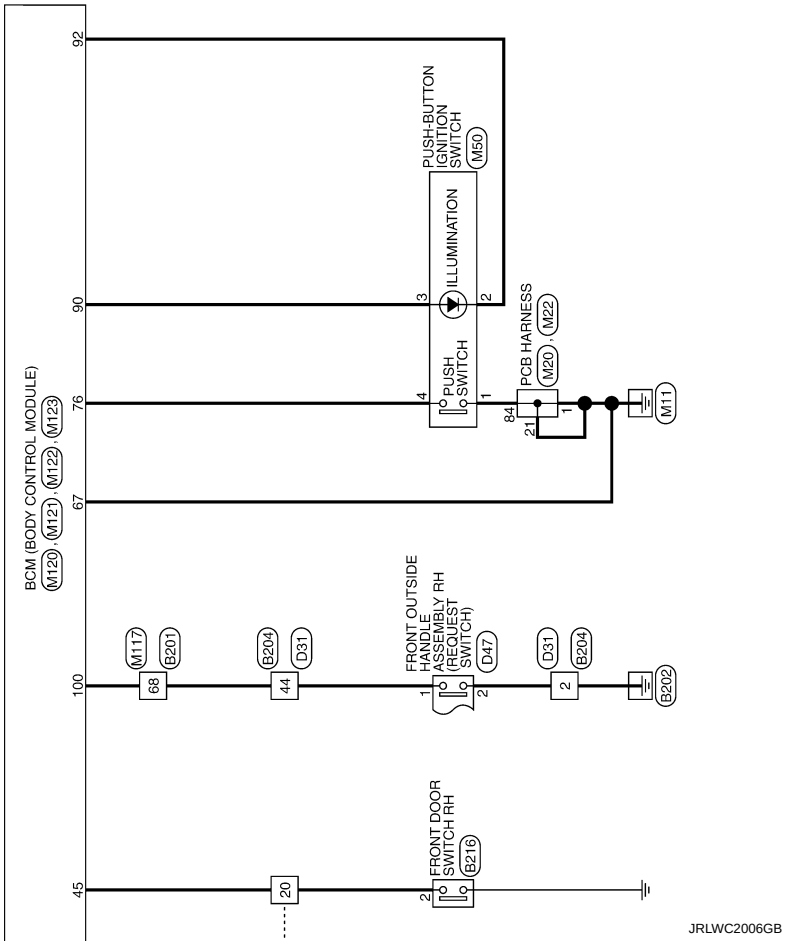
BCM (BODY CONTROL MODULE)
M120, M121, M122, M123
45
100
67
76
90
92
M117
B201
68
B204
D31
44
20
FRONT DOOR SWITCH RH
B216
FRONT OUTSIDE HANDLE ASSEMBLY RH (REQUEST SWITCH)
D47
D31
B204
2
B202
PUSH SWITCH
ILLUMINATION
PUSH-BUTTON IGNITION SWITCH
M50
PCB HARNESS
M20
M22
84
21
M11
JRLWC2006GB

ILLUMINATION

Wiring Diagram

INFOID:0000000008140830

For connector terminal arrangements, harness layouts, and alphabets in a ⬡ (option abbreviation; if not described in wiring diagram), refer to GI-13, "Connector Information".

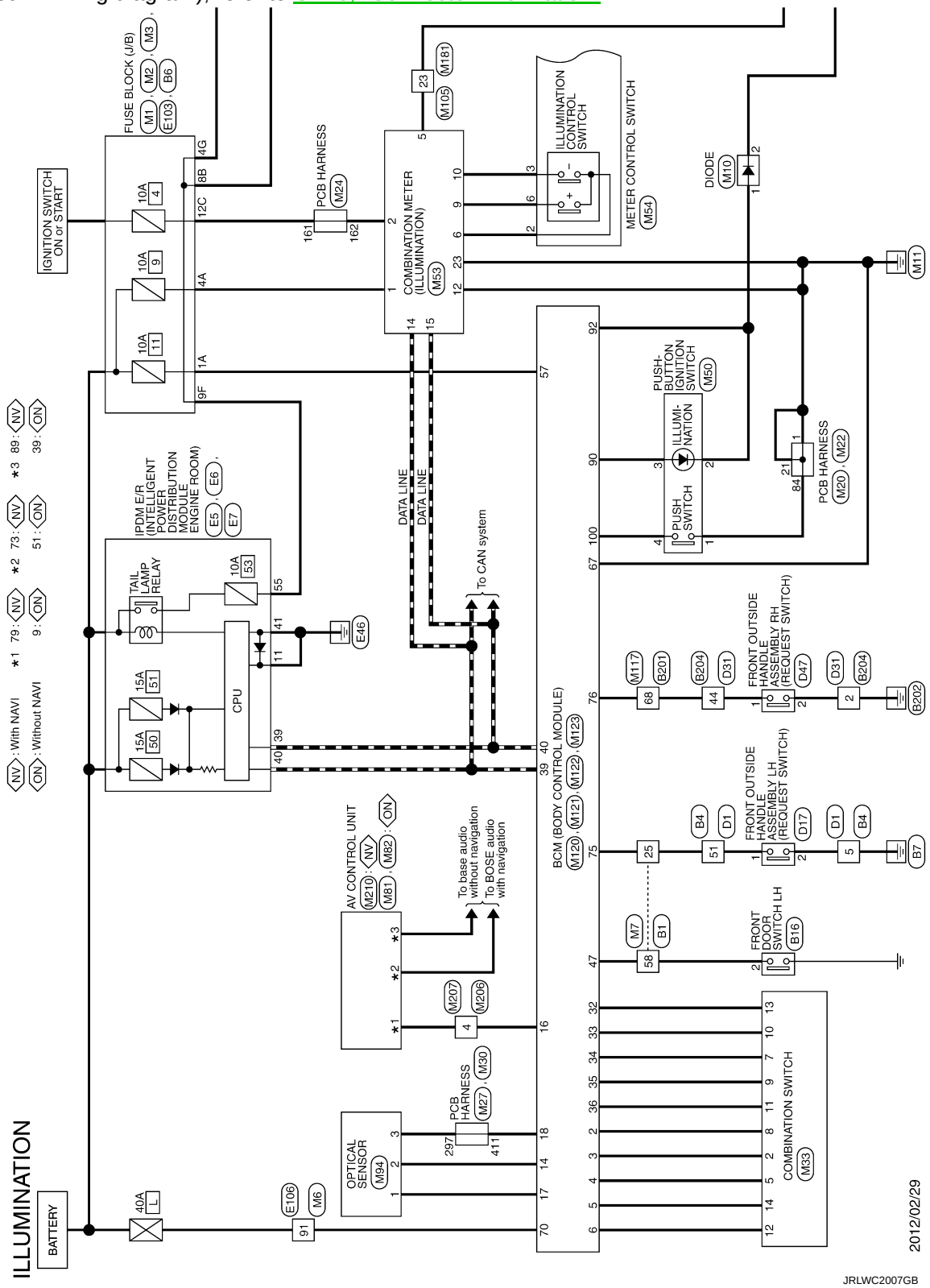

< WIRING DIAGRAM >

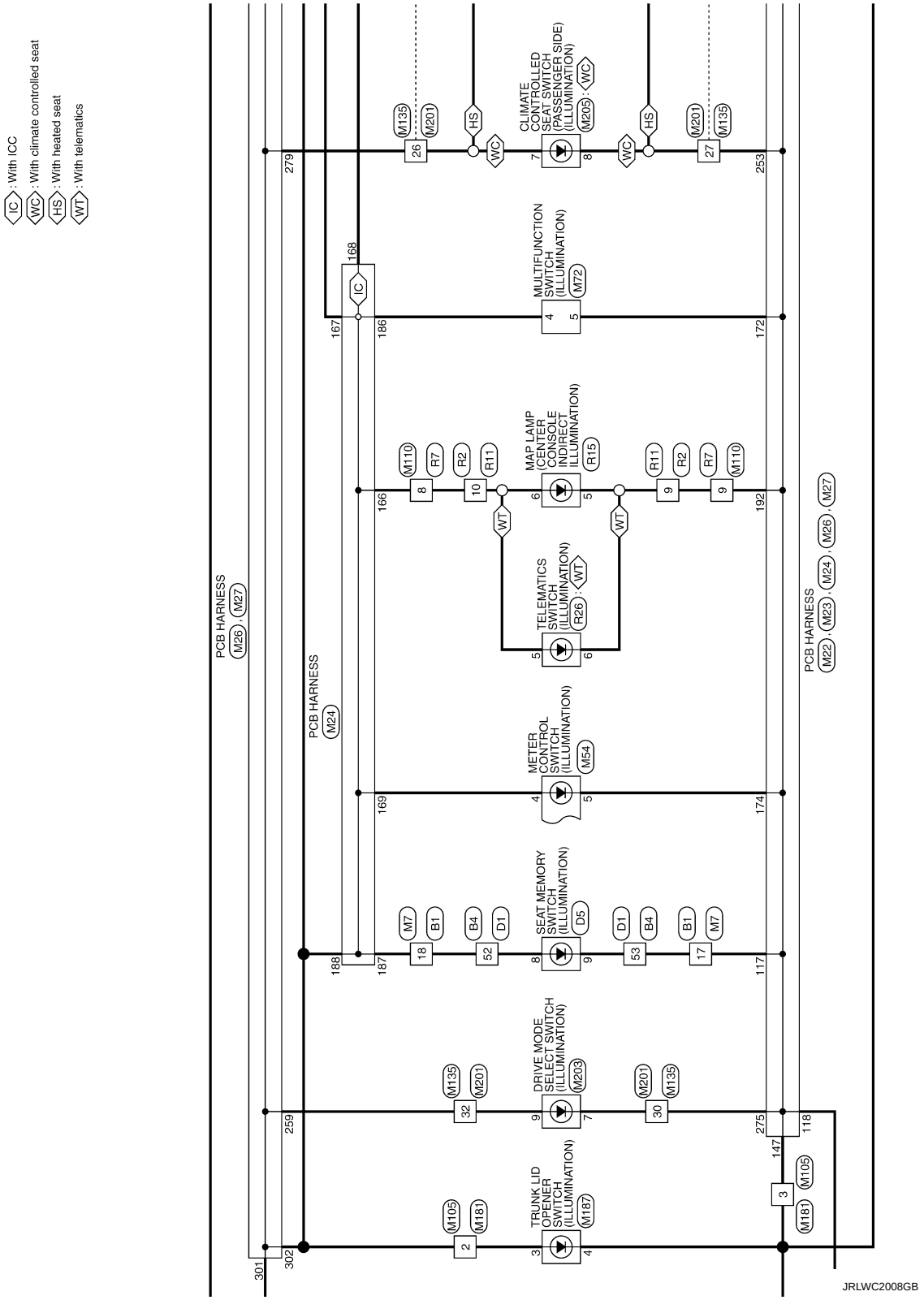

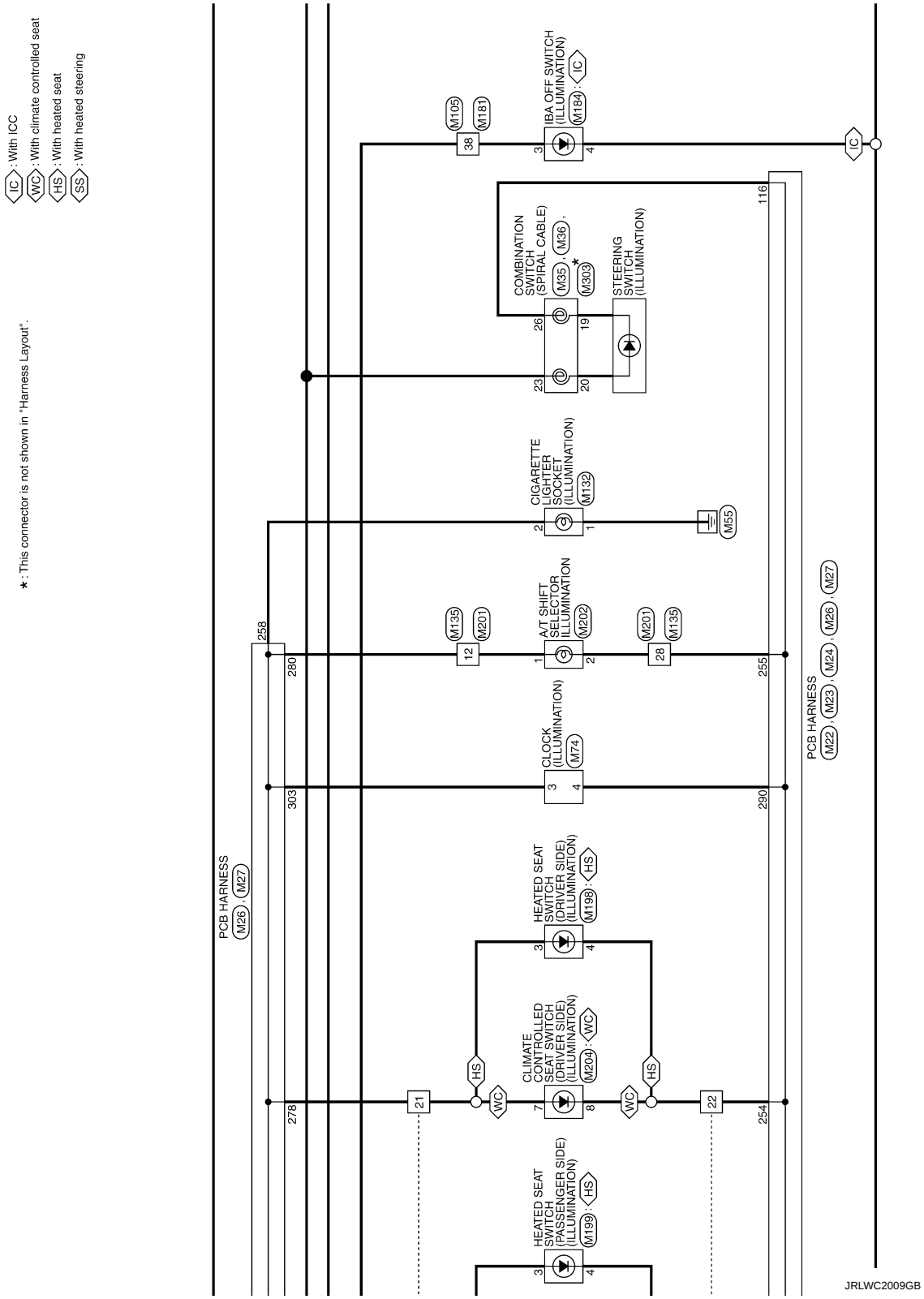
IC : With ICC
WC : With climate controlled seat
HS : With heated seat
SS : With heated steering
★ : This connector is not shown in "Harness Layout".
PCB HARNESS
(M26), (M27)
258
280
303
278
21
HS
WC
HEATED SEAT SWITCH (PASSENGER SIDE) (ILLUMINATION)
(M199) : HS
CLIMATE CONTROLLED SEAT SWITCH (DRIVER SIDE) (ILLUMINATION)
(M204) : WC
HEATED SEAT SWITCH (DRIVER SIDE) (ILLUMINATION)
(M198) : HS
CLOCK (ILLUMINATION)
(M74)
12
(M135)
(M201)
A/T SHIFT SELECTOR ILLUMINATION
(M202)
28
(M201)
(M135)
CIGARETTE LIGHTER SOCKET (ILLUMINATION)
(M132)
(M55)
COMBINATION SWITCH (SPIRAL CABLE)
(M35), (M36), ★(M303)
STEERING SWITCH (ILLUMINATION)
38
(M105)
(M181)
IBA OFF SWITCH (ILLUMINATION)
(M184) : IC
22
254
290
255
116
PCB HARNESS
(M22), (M23), (M24), (M26), (M27)
JRLWC2009GB

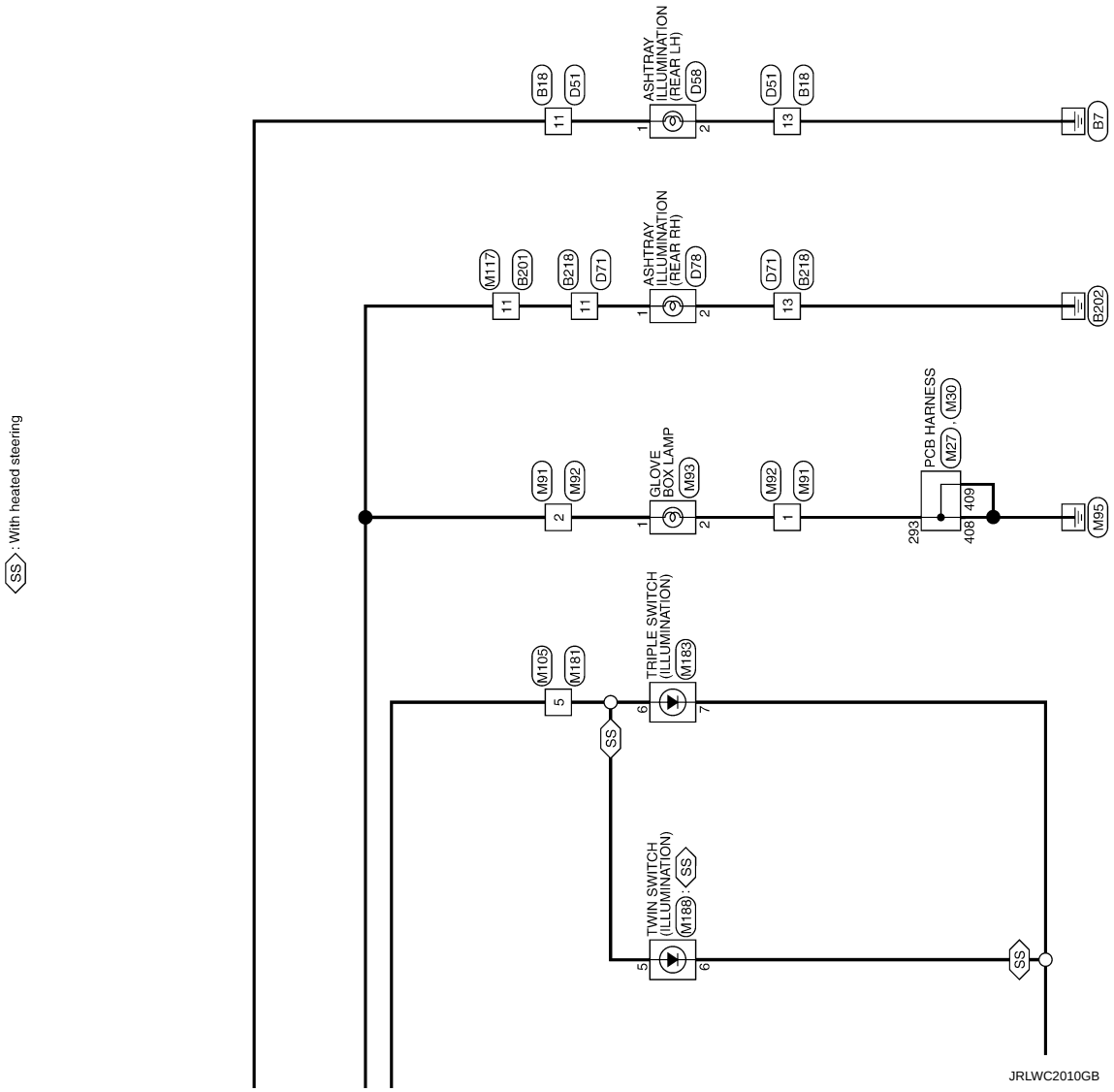
SS : With heated steering
B18
D51
11
ASHTRAY ILLUMINATION (REAR LH)
D58
D51
B18
13
B7
M117
B201
11
B218
D71
11
ASHTRAY ILLUMINATION (REAR RH)
D78
D71
B218
13
B202
M91
M92
2
GLOVE BOX LAMP
M93
M92
M91
1
PCB HARNESS
M27
M30
293
408
409
M95
M105
M181
5
TRIPLE SWITCH (ILLUMINATION)
M183
SS
TWIN SWITCH (ILLUMINATION)
M198 : SS
SS
JRLWC2010GB

BASIC INSPECTION

DIAGNOSIS AND REPAIR WORK FLOW

Work Flow

INFOID:0000000008140831

OVERALL SEQUENCE

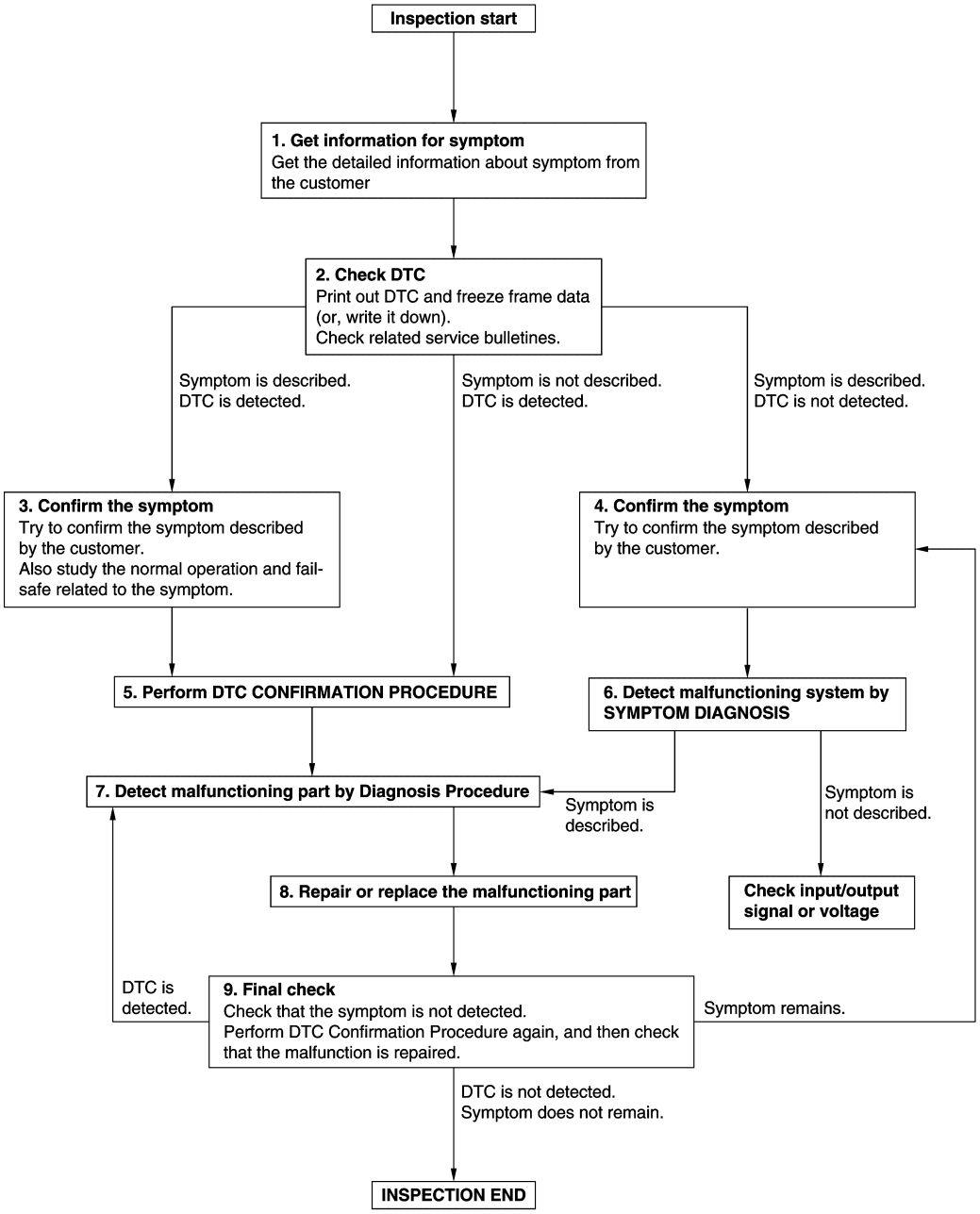

JMKIA8652GB

DETAILED FLOW

1. GET INFORMATION FOR SYMPTOM

1. Get detailed information from the customer about the symptom (the condition and the environment when the incident/malfunction occurs).
2. Check operation condition of the function that is malfunctioning.

>> GO TO 2.

2. CHECK DTC

1. Check DTC.
2. Perform the following procedure if DTC is detected.
- Record DTC and freeze frame data (Print them out using CONSULT.)
- Erase DTC.
- Study the relationship between the cause detected by DTC and the symptom described by the customer.
3. Check related service bulletins for information.

Are any symptoms described and any DTC detected?

Symptom is described, DTC is detected>>GO TO 3.
Symptom is described, DTC is not detected>>GO TO 4.
Symptom is not described, DTC is detected>>GO TO 5.

3. CONFIRM THE SYMPTOM

Try to confirm the symptom described by the customer.
Also study the normal operation and fail-safe related to the symptom.
Verify relation between the symptom and the condition when the symptom is detected.

>> GO TO 5.

4. CONFIRM THE SYMPTOM

Try to confirm the symptom described by the customer.
Verify relation between the symptom and the condition when the symptom is detected.

>> GO TO 6.

5. PERFORM DTC CONFIRMATION PROCEDURE

Perform DTC CONFIRMATION PROCEDURE for the detected DTC, and then check that DTC is detected again. At this time, always connect CONSULT to the vehicle, and check self diagnostic results in real time.
If two or more DTCs are detected, refer to DTC INSPECTION PRIORITY CHART, and determine trouble diagnosis order.

NOTE:

- Freeze frame data is useful if the DTC is not detected.
- Perform Component Function Check if DTC CONFIRMATION PROCEDURE is not included on Service Manual. This simplified check procedure is an effective alternative though DTC cannot be detected during this check.
  If the result of Component Function Check is NG, it is the same as the detection of DTC by DTC CONFIRMATION PROCEDURE.

Is DTC detected?

YES >> GO TO 7.
NO >> Check according to GI-49, "Intermittent Incident".

6. DETECT MALFUNCTIONING SYSTEM BY SYMPTOM DIAGNOSIS

Detect malfunctioning system according to SYMPTOM DIAGNOSIS based on the confirmed symptom in step 4, and determine the trouble diagnosis order based on possible causes and symptom.

Is the symptom described?

YES >> GO TO 7.
NO >> Monitor input data from related sensors or check voltage of related module terminals using CONSULT.

7. DETECT MALFUNCTIONING PART BY DIAGNOSIS PROCEDURE

Inspect according to Diagnosis Procedure of the system.

Is malfunctioning part detected?

YES >> GO TO 8.
NO >> Check according to GI-49, "Intermittent Incident".

8. REPAIR OR REPLACE THE MALFUNCTIONING PART

1. Repair or replace the malfunctioning part.
2. Reconnect parts or connectors disconnected during Diagnosis Procedure again after repair and replacement.
3. Check DTC. If DTC is detected, erase it.

>> GO TO 9.

9. FINAL CHECK

When DTC is detected in step 2, perform DTC CONFIRMATION PROCEDURE again, and then check that the malfunction is repaired securely.
When symptom is described by the customer, refer to confirmed symptom in step 3 or 4, and check that the symptom is not detected.

Is DTC detected and does symptom remain?

YES-1 >> DTC is detected: GO TO 7.
YES-2 >> Symptom remains: GO TO 4.
NO >> Before returning the vehicle to the customer, always erase DTC.

DTC/CIRCUIT DIAGNOSIS

INTERIOR ROOM LAMP POWER SUPPLY CIRCUIT

Description

INFOID:0000000008140832

Provides the interior room lamp power supply. Also cuts the power supply when the interior room lamp battery saver activating.

Component Function Check

INFOID:0000000008140833

1.CHECK INTERIOR ROOM LAMP POWER SUPPLY FUNCTION

CONSULT ACTIVE TEST
1. Turn ignition switch ON.
2. Turn each interior room lamp ON.
- Personal lamp
- Map lamp
- Foot lamp
- Trunk room lamp
- Step lamp
- Outside handle lamp
- Vanity mirror lamp
3. Select “BATTERY SAVER” of BCM (BATTERY SAVER) active test item.
4. With operating the test items, check that each interior room lamp turns ON/OFF.

Off : Interior room lamp OFF

On : Interior room lamp ON

Does the interior room lamp turn ON/OFF?

YES >> Interior room lamp power supply circuit is normal.
NO >> Refer to INL-30, "Diagnosis Procedure".

Diagnosis Procedure

INFOID:0000000008140834

1.CHECK INTERIOR ROOM LAMP POWER SUPPLY OUTPUT

CONSULT ACTIVE TEST
1. Turn ignition switch OFF.
2. Disconnect the following connectors.
- Personal lamp
- Map lamp
- Foot lamp (both sides)
- Trunk room lamp
- Step lamp (ALL)
- Outside handle lamp (both sides)
- Vanity mirror lamp (both sides)
3. Turn ignition switch ON.
4. Select “BATTERY SAVER” of BCM (BATTERY SAVER) active test item.
5. With operating the test item, check voltage between BCM harness connector and ground.

BCM (+) Connector	BCM (+) Terminal	(–)	Test item		Voltage (Approx.)
M122	56	Ground	BATTERY SAVER	Off	0 V
				On	12 V

Is the inspection result normal?

YES >> GO TO 2.
NO >> GO TO 3.

2. CHECK INTERIOR ROOM LAMP POWER SUPPLY OPEN CIRCUIT

1. Turn ignition switch OFF.
2. Disconnect the BCM connector.
3. Check continuity between BCM harness connector and each interior room lamp harness connector.

BCM		Each interior room lamp			Continuity
Connector	Terminal	Connector		Terminal	
M122	56	Personal lamp	R14	1	Existed
		Map lamp	R15		
		Foot lamp (driver side)	M186		
		Foot lamp (passenger side)	M114		
		Trunk room lamp	B47		
		Step lamp (driver side)	D12		
		Step lamp (passenger side)	D42		
		Step lamp (rear LH)	D57		
		Step lamp (rear RH)	D77		
		Outside handle lamp (driver side)	D17	3	
		Outside handle lamp (passenger side)	D47		
		Vanity mirror lamp (driver side)	R12	2	
		Vanity mirror lamp (passenger side)	R13		

Is the inspection result normal?

YES >> Check for internal short circuit of each interior room lamp.
NO >> Repair or replace harnesses.

3. CHECK INTERIOR ROOM LAMP POWER SUPPLY SHORT CIRCUIT

1. Turn ignition switch OFF.
2. Disconnect the BCM connector.
3. Check continuity between BCM harness connector and ground.

BCM		Ground	Continuity
Connector	Terminal		
M122	56		Not existed

Is the inspection result normal?

YES >> Replace BCM. Refer to BCS-80, "Removal and Installation".
NO >> Repair or replace harnesses.

INTERIOR ROOM LAMP CONTROL CIRCUIT

Description

INFOID:0000000008140835

Controls each interior room lamp (ground side) by PWM signal.
NOTE:
PWM signal control period is approximately 250 Hz (in the gradual brightening/dimming).

Component Function Check

INFOID:0000000008140836

NOTE:
Before performing the diagnosis, check that the following is normal.
- Interior room lamp power supply
- Map lamp bulb
- Personal lamp bulb
- Foot lamp bulb

1. CHECK INTERIOR ROOM LAMP CONTROL FUNCTION

CONSULT ACTIVE TEST
1. Switch the map lamp switch to DOOR.
2. Turn ignition switch ON.
3. Select “INT LAMP” of BCM (INT LAMP) active test item.
4. With operating the test items, check that each interior room lamp turns ON/OFF (gradual brightening/dimming).

On : Interior room lamp gradual brightening
Off : Interior room lamp gradual dimming

Does the interior room lamp turns ON/OFF (gradual brightening/dimming)?

YES >> Interior room lamp control circuit is normal.
NO >> Refer to INL-32, "Diagnosis Procedure".

Diagnosis Procedure

INFOID:0000000008140837

1. CHECK INTERIOR ROOM LAMP CONTROL OUTPUT

CONSULT ACTIVE TEST
1. Turn ignition switch OFF.
2. Remove all the bulbs of map lamp, foot lamp and personal lamp.
3. Turn ignition switch ON.
4. Select “INT LAMP” of BCM (INT LAMP) active test item.
5. With operating the test item, check continuity between BCM harness connector and ground.

BCM		Ground	Test item		Continuity
Connector	Terminal				
M122	63		INT LAMP	On	Existed
				Off	Not existed

Is the inspection result normal?

YES >> GO TO 2.
NO-1 >> Continuity exists and remains unchanged: GO TO 3.
NO-2 >> Continuity does not exist and remains unchanged: Replace BCM. Refer to BCS-80, "Removal and Installation".

2. CHECK INTERIOR ROOM LAMP CONTROL OPEN CIRCUIT

1. Turn ignition switch OFF.
2. Disconnect BCM connector, map lamp connector, personal lamp connector and foot lamp connector.
3. Check continuity between BCM harness connector and foot lamp harness connector.

BCM		Foot lamp			Continuity
Connector	Terminal	Connector		Terminal	
M122	63	Driver side	M186	2	Existed
		Passenger side	M114		

4. Check continuity between BCM harness connector and map lamp harness connector.

BCM		Map lamp		Continuity
Connector	Terminal	Connector	Terminal	
M122	63	R15	2	Existed

5. Check continuity between personal lamp harness connector and map lamp harness connector.

Personal lamp		Map lamp		Continuity
Connector	Terminal	Connector	Terminal	
R14	3	R15	4	Existed

Is the inspection result normal?

YES >> Replace map lamp, personal lamp or foot lamp.
NO >> Repair or replace harnesses.

3. CHECK INTERIOR ROOM LAMP CONTROL SHORT CIRCUIT

1. Turn ignition switch OFF.
2. Disconnect BCM connector, map lamp connector, personal lamp connector and foot lamp connector.
3. Check continuity between BCM harness connector and ground.

BCM		Ground	Continuity
Connector	Terminal		
M122	63		Not existed

Is the inspection result normal?

YES >> Replace BCM. Refer to BCS-80, "Removal and Installation".
NO >> Repair or replace harnesses.

TRUNK ROOM LAMP CIRCUIT

Description

INFOID:0000000008140838

Controls the trunk room lamp (ground side) to turn the trunk room lamp ON and OFF.

Diagnosis Procedure

INFOID:0000000008140839

NOTE:
Before performing the diagnosis, check that the following is normal.
- Interior room lamp power supply
- trunk room lamp bulb

1.CHECK TRUNK ROOM LAMP OUTPUT

1. Turn ignition switch OFF.
2. Remove the trunk room lamp bulb.
3. Check continuity between BCM harness connector and ground.

BCM		Ground	Condition		Continuity
Connector	Terminal				
M121	49		Trunk lid	Open	Existed
				Closed	Not existed

Is the inspection result normal?

YES >> GO TO 2.
NO-1 >> Continuity exists and remains unchanged: GO TO 3.
NO-2 >> Continuity does not exist and remains unchanged: Replace BCM. Refer to BCS-80, "Removal and Installation".

2.CHECK TRUNK ROOM LAMP OPEN CIRCUIT

1. Disconnect BCM connector and trunk room lamp connector.
2. Check continuity between BCM harness connector and trunk room lamp harness connector.

BCM		Trunk room lamp		Continuity
Connector	Terminal	Connector	Terminal	
M121	49	B47	2	Existed

Is the inspection result normal?

YES >> Replace trunk room lamp.
NO >> Repair or replace harnesses.

3.CHECK TRUNK ROOM LAMP SHORT CIRCUIT

1. Disconnect BCM connector and trunk room lamp connector.
2. Check continuity between BCM harness connector and ground.

BCM		Ground	Continuity
Connector	Terminal		
M121	49		Not existed

Is the inspection result normal?

YES >> Replace BCM. Refer to BCS-80, "Removal and Installation".
NO >> Repair or replace harnesses.

STEP LAMP CIRCUIT

Description

INFOID:0000000008140840

Controls the step lamp (ground side) to turn the step lamp ON and OFF.

Component Function Check

INFOID:0000000008140841

NOTE:
Before performing the diagnosis, check that the following is normal.
- Interior room lamp power supply
- Step lamp bulb

1. CHECK STEP LAMP OPERATION

CONSULT ACTIVE TEST
1. Turn ignition switch ON.
2. Select “STEP LAMP TEST” of BCM (INT LAMP) active test item.
3. With operating the test items, check that step lamp turns ON/OFF.

On : Step lamp ON
Off : Step lamp OFF

Does the step lamp turn ON/OFF?

YES >> Step lamp circuit is normal.
NO >> Refer to INL-35, "Diagnosis Procedure".

Diagnosis Procedure

INFOID:0000000008140842

1. CHECK STEP LAMP OUTPUT

CONSULT ACTIVE TEST
1. Turn ignition switch OFF.
2. Remove the step lamp bulbs (ALL).
3. Turn ignition switch ON.
4. Select “STEP LAMP TEST” of BCM (INT LAMP) active test item.
5. With operating the test item, check continuity between BCM harness connector and ground.

BCM		Ground	Test item		Continuity
Connector	Terminal				
M122	62		STEP LAMP TEST	On	Existed
				Off	Not existed

Is the inspection result normal?

YES >> GO TO 2.
NO-1 >> Continuity exists and remains unchanged: GO TO 3.
NO-2 >> Continuity does not exist and remains unchanged: Replace BCM. Refer to BCS-80, "Removal and Installation".

2. CHECK STEP LAMP OPEN CIRCUIT

1. Turn ignition switch OFF.
2. Disconnect BCM connector, and step lamp connector.
3. Check continuity between BCM harness connector and step lamp harness connector.

BCM		Step lamp			Continuity
Connector	Terminal	Connector		Terminal	
M122	62	Driver side	D12	2	Existed
		Passenger side	D42		
		Rear LH	D57		
		Rear RH	D77		

Is the inspection result normal?

YES >> Replace step lamp.
NO >> Repair or replace harnesses.

3. CHECK STEP LAMP SHORT CIRCUIT

1. Turn ignition switch OFF.
2. Disconnect BCM connector and step lamp connector.
3. Check continuity between BCM harness connector and ground.

BCM		Ground	Continuity
Connector	Terminal		
M122	62		Not existed

Is the inspection result normal?

YES >> Repair or replace harnesses.
NO >> Replace BCM. Refer to BCS-80, "Removal and Installation".

OUTSIDE HANDLE LAMP CIRCUIT

Description

INFOID:0000000008140843

Controls the outside handle lamp (ground side) to turn the outside handle lamp ON and OFF.

Diagnosis Procedure

INFOID:0000000008140844

NOTE:
Before performing the diagnosis, check that the interior room lamp power supply is normal.

1. CHECK OUTSIDE HANDLE LAMP OUTPUT

1. Turn ignition switch OFF.
2. Disconnect outside handle lamp connector.
3. Check continuity between BCM harness connector and ground.

BCM		Ground	Condition		Continuity
Connector	Terminal				
M123	72		Any door	Open	Existed
				Closed	Not existed

Is the inspection result normal?

YES >> GO TO 2.
NO-1 >> Continuity exists and remains unchanged: GO TO 3.
NO-2 >> Continuity does not exist and remains unchanged: Replace BCM. Refer to BCS-80, "Removal and Installation".

2. CHECK OUTSIDE HANDLE LAMP OPEN CIRCUIT

Check continuity between BCM harness connector and outside handle lamp harness connector.

BCM		Outside Handle lamp			Continuity
Connector	Terminal	Connector		Terminal	
M123	72	Driver side	D17	4	Existed
		Passenger side	D47		

Is the inspection result normal?

YES >> Replace outside handle lamp.
NO >> Repair or replace harnesses.

3. CHECK OUTSIDE HANDLE LAMP SHORT CIRCUIT

Check continuity between BCM harness connector and ground.

BCM		Ground	Continuity
Connector	Terminal		
M123	72		Not existed

Is the inspection result normal?

YES >> Replace BCM. Refer to BCS-80, "Removal and Installation".
NO >> Repair or replace harnesses.

PUSH-BUTTON IGNITION SWITCH ILLUMINATION CIRCUIT

Description

INFOID:0000000008140845

Provides the power supply and the ground to control the push-button ignition switch illumination.

Component Function Check

INFOID:0000000008140846

1.CHECK PUSH-BUTTON IGNITION SWITCH ILLUMINATION OPERATION

CONSULT ACTIVE TEST
1. Turn ignition switch ON.
2. Select “ENGINE SW ILLUMI” of BCM (INTELLIGENT KEY) active test item.
3. With operating the test items, check that the push-button ignition switch illumination turns ON/OFF.

On : Push-button ignition switch illumination ON
Off : Push-button ignition switch illumination OFF

Does the push-button ignition switch illumination turn ON/OFF?

YES >> Push-button ignition switch illumination circuit is normal.
NO >> Refer to INL-38, "Diagnosis Procedure".

Diagnosis Procedure

INFOID:0000000008140847

1.CHECK PUSH-BUTTON IGNITION SWITCH ILLUMINATION POWER SUPPLY OUTPUT

1. Turn ignition switch OFF.
2. Disconnect push-button ignition switch connector.
3. Check voltage between push-button ignition switch harness connector and ground.

(+)		(–)	Condition		Voltage (Approx.)
Push-button ignition switch					
Connector	Terminal				
M50	3	Ground	Push-button ignition switch illumination	ON	12 V
				OFF	0 V

Is the inspection result normal?

YES >> GO TO 4.
NO >> GO TO 2.

2.CHECK PUSH-BUTTON IGNITION SWITCH ILLUMINATION POWER SUPPLY OPEN CIRCUIT

1. Turn ignition switch OFF.
2. Disconnect BCM connector.
3. Check continuity between BCM harness connector and the push-button ignition switch harness connector.

BCM		Push-button ignition switch		Continuity
Connector	Terminal	Connector	Terminal	
M123	90	M50	3	Existed

Is the inspection result normal?

YES >> GO TO 3.
NO >> Repair or replace harnesses.

3.CHECK PUSH-BUTTON IGNITION SWITCH ILLUMINATION POWER SUPPLY SHORT CIRCUIT

Check continuity between BCM harness connector and ground.

BCM		Ground	Continuity
Connector	Terminal		
M123	90		Not existed

Is the inspection result normal?

YES >> Replace BCM. Refer to BCS-80, "Removal and Installation".
NO >> Repair or replace harnesses.

4. CHECK PUSH-BUTTON IGNITION SWITCH ILLUMINATION GROUND CIRCUIT

1. Turn ignition switch OFF.
2. Check continuity between push-button ignition switch harness connector and BCM harness connector.

Push-button ignition switch		BCM		Continuity
Connector	Terminal	Connector	Terminal	
M50	2	M123	92	Existed

3. Check continuity between push-button ignition switch harness connector and ground.

Push-button ignition switch		Ground	Continuity
Connector	Terminal		
M50	2		Not existed

Is the inspection result normal?

YES >> Replace push-button ignition switch.
NO >> Repair or replace harnesses.

SYMPTOM DIAGNOSIS

INTERIOR LIGHTING SYSTEM SYMPTOMS

Symptom Table

INFOID:0000000008140848

NOTE:
Perform the self-diagnosis with CONSULT before the symptom diagnosis. Perform the trouble diagnosis if any DTC is detected.

Symptom	Possible cause	Inspection item
All the following lamps do not turn ON. • Map lamp • Personal lamp • Vanity mirror lamp • Foot lamp • Step lamp • Outside handle lamp • Trunk room lamp	• Harness between BCM and each interior room lamp • BCM	Interior room lamp power supply circuit Refer to INL-30.
• Interior room lamp does not turn ON even though the door is open. (It turns ON when turning the interior room lamp ON.) • Interior room lamp does not turn OFF even though the door is closed.	• Harness between BCM and each door switch • Harness between BCM and each interior room lamp • BCM	Door switch circuit Refer to DLK-61.
		Interior room lamp control circuit Refer to INL-32.
Interior room lamp timer does not activate. (It turns ON/ OFF when the door opens/closes.)	—	Check the interior room lamp setting. Refer to INL-14.
• Outside handle lamp does not turn ON even though the door is open. • Outside handle lamp does not turn OFF even though the door is closed.	• Harness between BCM and each door switch • Harness between BCM and outside handle lamp • BCM	Door switch circuit Refer to DLK-61.
		Outside handle lamp circuit Refer to INL-37.
• Trunk room lamp does not turn ON even though the trunk lid is open. (It turns ON when turning the trunk room lamp ON.) • Trunk room lamp or does not turn OFF even though the trunk lid is closed.	• Harness between BCM and trunk closure assembly • Harness between BCM and trunk room lamp • BCM	Trunk lid open signal circuit Refer to DLK-74.
		Trunk room lamp circuit Refer to INL-34.
• Step lamps (ALL) do not turn ON. • Step lamps (ALL) do not turn OFF.	• Harness between BCM and each step lamp • BCM	Door switch circuit Refer to DLK-61.
		Step lamp circuit Refer to INL-35.
Push-button ignition switch illumination does not illuminate.	• Harness between BCM and push-button ignition switch • BCM	Push-button ignition switch illumination circuit Refer to INL-38.
Interior room lamp battery saver does not activate.	BCM	Replace BCM. Refer to BCS-80.

REMOVAL AND INSTALLATION

MAP LAMP

Exploded View

INFOID:0000000008140849

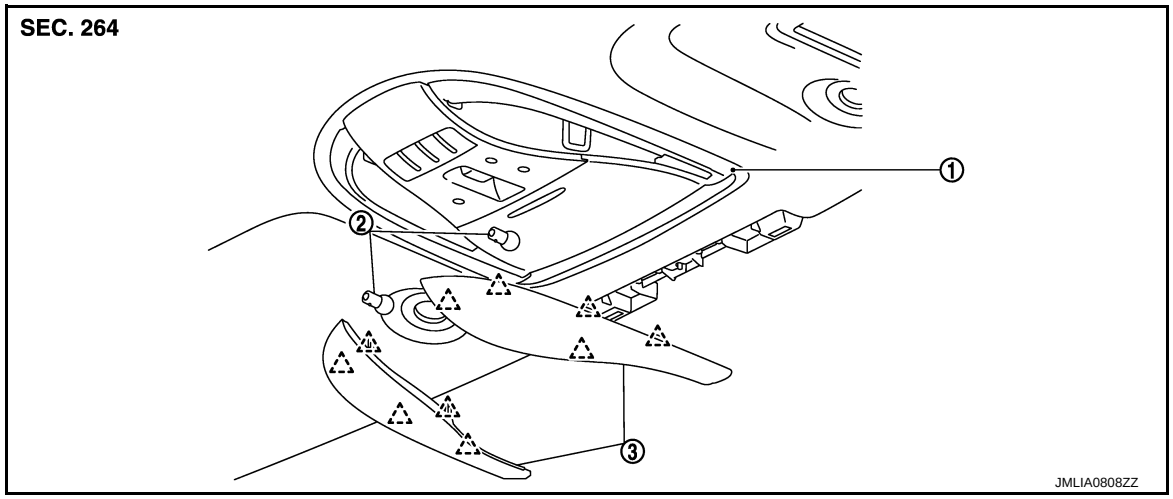

1. Map lamp assembly
2. Bulb
3. Lens

: Pawl

Removal and Installation

INFOID:0000000008140850

CAUTION:
- **Disconnect the 12V battery negative terminal or remove power circuit fuse while performing the operation to prevent electric leakage.**

Removal

1. Remove front and rear assist grips (LH and RH). Refer to INT-47, "Removal and Installation".
2. Remove center pillar upper garnish (LH and RH). Refer to INT-37, "CENTER PILLAR UPPER GARNISH : Removal and Installation".
3. Remove partially front body side welt (headlining side).
4. Remove front pillar garnish. Refer to INT-31, "FRONT PILLAR GARNISH : Removal and Installation".
5. Remove front camera finisher. Refer to INT-47, "Removal and Installation".
6. Remove sun visor assembly (LH and RH). Refer to INT-47, "Removal and Installation".
7. Remove front roof finisher. Refer to INT-47, "Removal and Installation".
8. Remove sun visor holders (LH and RH). Refer to INT-47, "Removal and Installation".
9. Open sunroof glass.
10. Insert a remover tool between the headlining and roof panel, and disengage metal clips (B). Pull down map lamp assembly to disengage joint dual-lock fastener (A).

    CAUTION:
    - **When removing, always use a remover tool that is made of plastic.**
    - **Map lamp is crimped from back of headlining.**
    - **To prevent damage of the sunroof, hold the sunroof with a rope or tape before removal operation.**

    : Metal clip

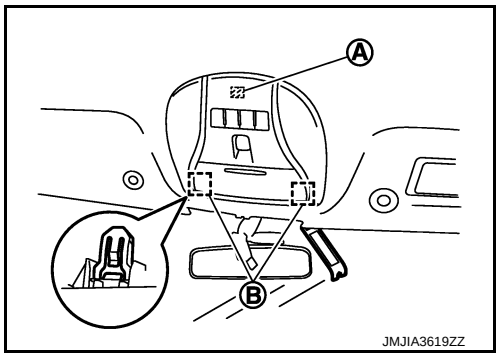

11. Remove map lamp assembly.

NOTE:
Operate from the opening part of sunroof to ease the work.

a. Remove harness connector (A).
b. Remove screws (B), and then remove map lamp bracket (1).
c. Remove map lamp back plate (3) from headlining while pressing engagement of each pawls in the direction as shown in the figure.

CAUTION:
When removing, support map lamp assembly (2) by hand so that it does not drop during the operation.

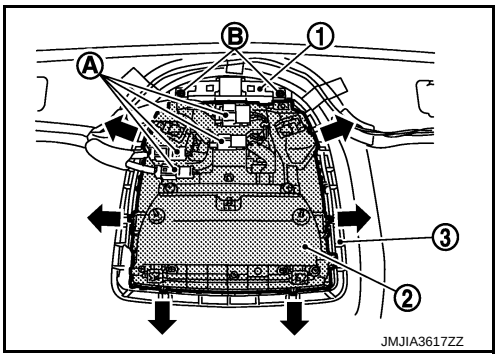

Installation

Install in the reverse order of removal.

Replacement

INFOID:0000000008140851

CAUTION:
- **Disconnect the 12V battery negative terminal or remove power circuit fuse while performing the operation to prevent electric leakage.**
- **Never touch the glass surface of the bulb with bare hands or allow oil or grease to get on it to prevent damage to the bulb.**
- **Never touch the glass surface of the bulb with bare hands because the surface is very hot just after the lamp is turned OFF to prevent a burns.**
- **Leaving the bulb removed from housing for a long period of time can deteriorate performance of the lens and reflector (causing dirty or clouding). Always prepare a new bulb and have it on hand when replacing the bulb.**

MAP LAMP BULB

1. Insert any appropriate tool into the gap between the lens to remove the lens.
2. Remove the bulb.

VANITY MIRROR LAMP

Exploded View

INFOID:0000000008140852

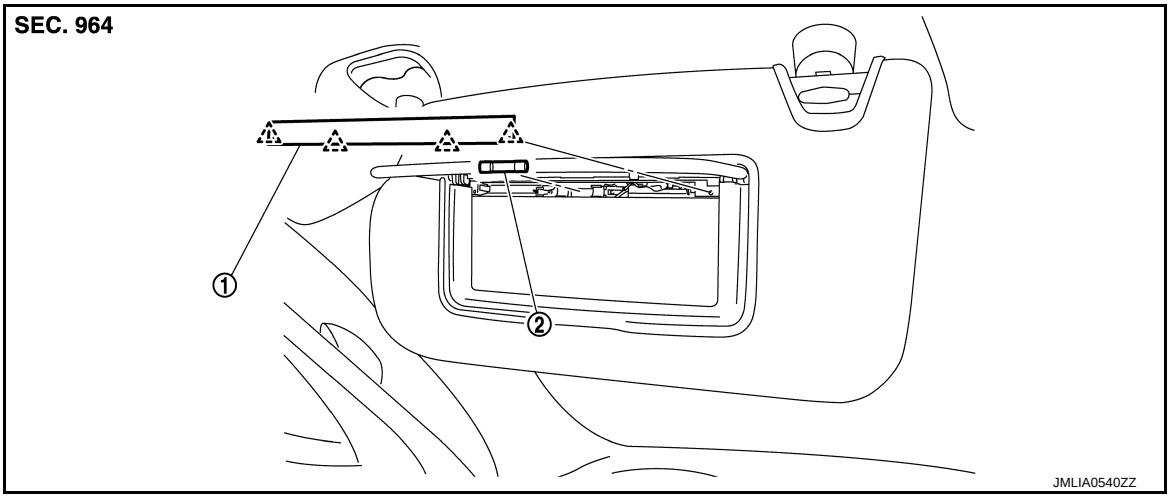

1. Lens
2. Bulb

: Pawl

Replacement

INFOID:0000000008140853

CAUTION:

- **Disconnect the 12V battery negative terminal or remove power circuit fuse while performing the operation to electric leakage.**
- **Never touch the glass surface of the bulb with bare hands or allow oil or grease to get on it to prevent damage to the bulb.**
- **Never touch the glass surface of the bulb with bare hands because the surface is very hot just after the lamp is turned OFF to prevent a burns.**
- **Leaving the bulb removed from housing for a long period of time can deteriorate performance of the lens and reflector (causing dirty or clouding). Always prepare a new bulb and have it on hand when replacing the bulb.**

VANITY MIRROR LAMP BULB

1. Insert any appropriate tool into the gap between the lens to remove the lens.
2. Remove the bulb.

CIGARETTE LIGHTER ILLUMINATION

Exploded View

INFOID:0000000008140854

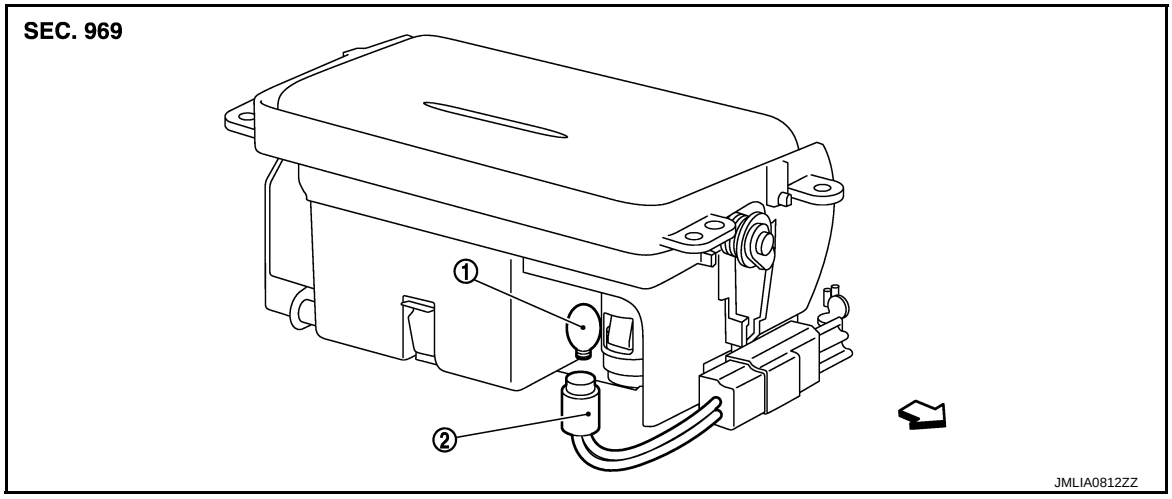

1. Bulb
2. Bulb socket

⇦ : Vehicle front

Removal and Installation

INFOID:0000000008140855

- Remove console finisher assembly. Refer to IP-24, "Removal and Installation". Removal and Installation.
- Remove ashtray assembly. Refer to IP-24, "Removal and Installation". Disassembly and assembly of center console assembly.

Replacement

INFOID:0000000008140856

CAUTION:

- **Disconnect the 12V battery negative terminal or remove power circuit fuse while performing the operation to electric leakage.**
- **Never touch the glass surface of the bulb with bare hands or allow oil or grease to get on it to prevent damage to the bulb.**
- **Never touch the glass surface of the bulb with bare hands because the surface is very hot just after the lamp is turned OFF to prevent a burns.**
- **Leaving the bulb removed from housing for a long period of time can deteriorate performance of the lens and reflector (causing dirty or clouding). Always prepare a new bulb and have it on hand when replacing the bulb.**

CIGRETTE LIGHTER ILLUMINATION BULB

1. Remove console finisher assembly, and then remove ashtray assembly. Refer to IP-24, "Removal and Installation".
2. Rotate bulb socket counterclockwise to unlock it.
3. Remove the bulb.

REAR DOOR ASHTRAY ILLUMINATION

Exploded View

INFOID:0000000008140857

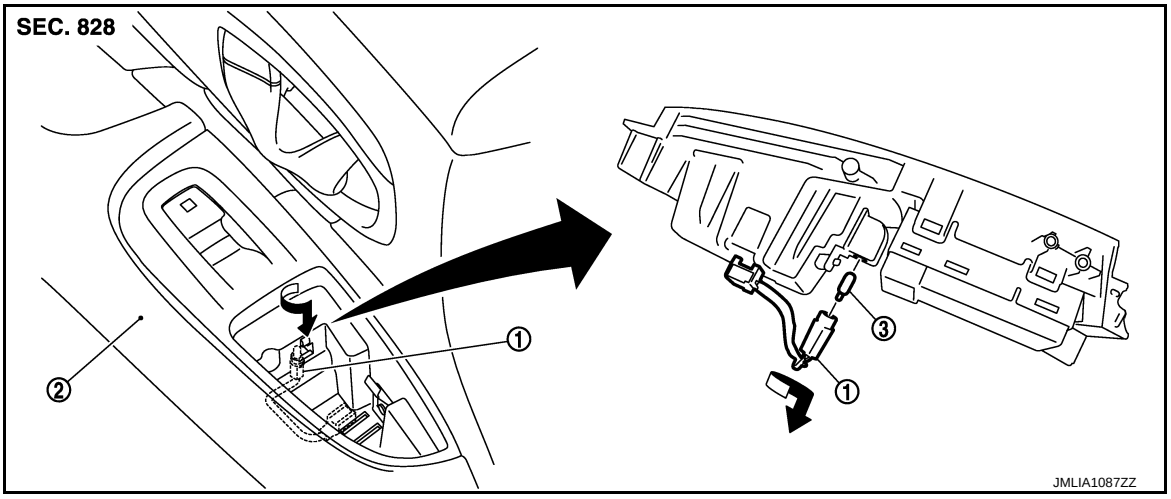

1. Ashtray lamp assembly
2. Rear door finisher
3. Bulb

Removal and Installation

INFOID:0000000008140858

Refer to INT-28, "Exploded View" for the rear door finisher installation or removal.

Replacement

INFOID:0000000008140859

CAUTION:

- **Disconnect the 12V battery negative terminal or remove power circuit fuse while performing the operation to electric leakage.**
- **Never touch the glass surface of the bulb with bare hands or allow oil or grease to get on it to prevent damage to the bulb.**
- **Never touch the glass surface of the bulb with bare hands because the surface is very hot just after the lamp is turned OFF to prevent a burns.**
- **Leaving the bulb removed from housing for a long period of time can deteriorate performance of the lens and reflector (causing dirty or clouding). Always prepare a new bulb and have it on hand when replacing the bulb.**

ASHTRAY ILLUMINATION BULB

1. Remove rear door finisher. Refer to INT-28, "REAR DOOR FINISHER : Removal and Installation".
2. Rotate bulb socket counterclockwise to unlock it.
3. Remove the bulb.

GLOVE BOX LAMP

Exploded View

INFOID:0000000008140860

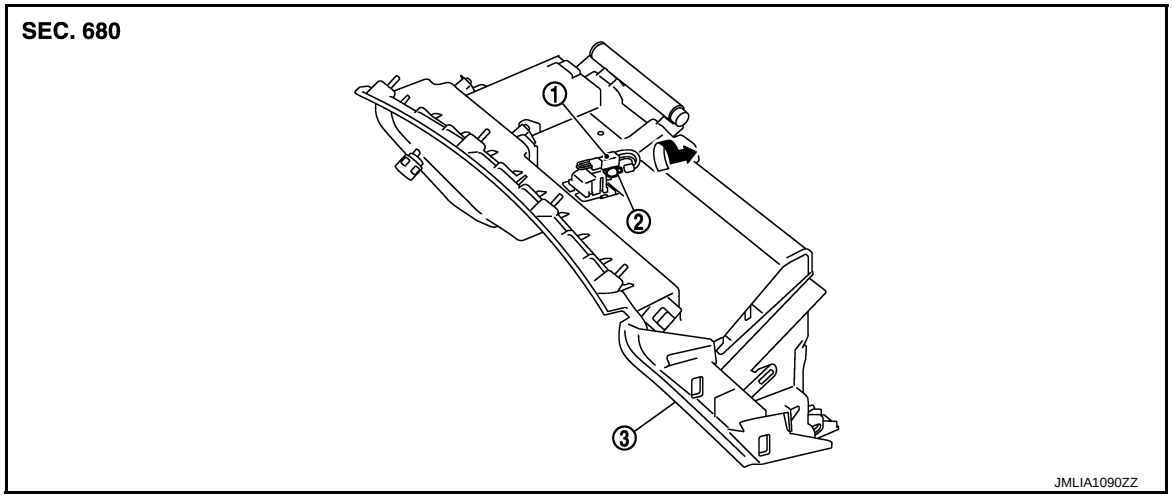

1. Bulb socket
2. Bulb
3. Instrument lower panel RH

Removal and Installation

INFOID:0000000008140861

Refer to IP-12, "Exploded View" for the instrument lower panel RH installation or removal.

Replacement

INFOID:0000000008140862

CAUTION:

- **Disconnect the 12V battery negative terminal or remove power circuit fuse while performing the operation to electric leakage.**
- **Never touch the glass surface of the bulb with bare hands or allow oil or grease to get on it to prevent damage to the bulb.**
- **Never touch the glass surface of the bulb with bare hands because the surface is very hot just after the lamp is turned OFF to prevent a burns.**
- **Leaving the bulb removed from housing for a long period of time can deteriorate performance of the lens and reflector (causing dirty or clouding). Always prepare a new bulb and have it on hand when replacing the bulb.**

GLOVE BOX LAMP BULB

1. Remove instrument lower cover. Refer to IP-13, "Removal and Installation".
2. Remove glove box assembly, and then remove instrument lower panel RH. Refer to IP-13, "Removal and Installation".
3. Rotate the bulb socket counterclockwise to unlock it.
4. Remove the bulb.

FOOT LAMP

DRIVER SIDE

DRIVER SIDE : Exploded View

INFOID:0000000008140863

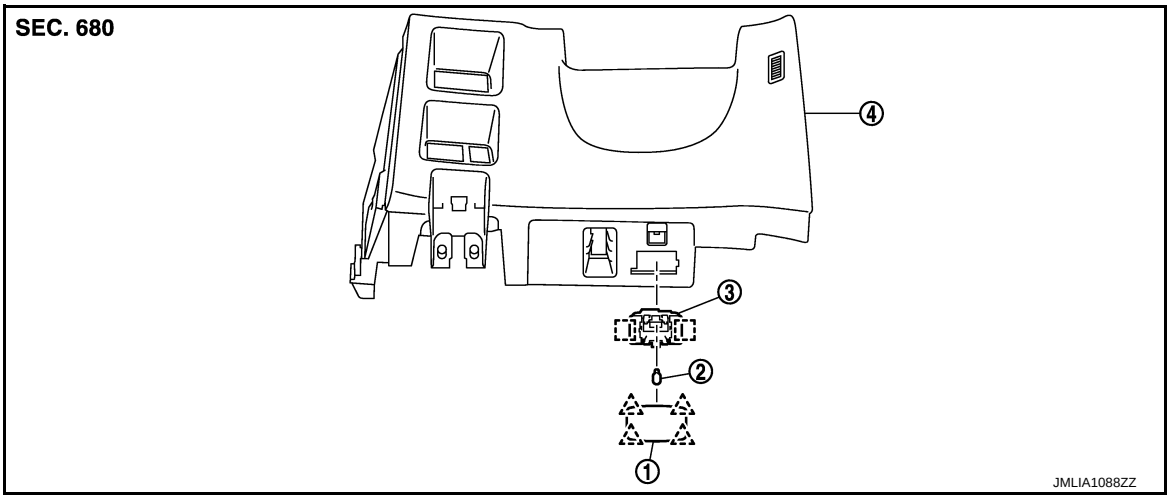

1. Lens
2. Bulb
3. Foot lamp case
4. Instrument lower panel LH

: Pawl

: Metal clip

DRIVER SIDE : Removal and Installation

INFOID:0000000008140864

REMOVAL

1. Insert any appropriate tool into the gap between the instrument lower panel LH and foot lamp case to disengage the foot lamp case fixing metal clips, and then remove foot lamp case.
2. Disconnect foot lamp harness connector.

INSTALLATION

Install in the reverse order of removal.

DRIVER SIDE : Replacement

INFOID:0000000008140865

FOOT LAMP BULB

1. Insert any appropriate tool into the gap between the lens. Remove the lens.
2. Remove the bulb.

PASSENGER SIDE

PASSENGER SIDE : Exploded View

INFOID:0000000008140866

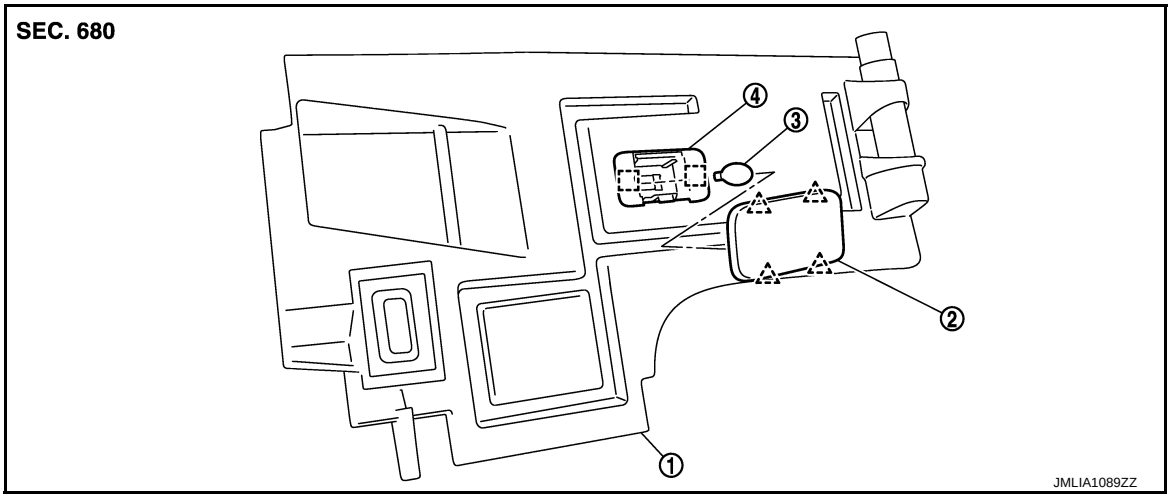

1. Instrument lower cover
2. Lens
3. Bulb
4. Foot lamp case

: Pawl

: Metal clip

PASSENGER SIDE : Removal and Installation

INFOID:0000000008140867

REMOVAL

1. Insert any appropriate tool into the gap between the instrument lower cover and foot lamp case to remove foot lamp case.
2. Disconnect foot lamp harness connector.

INSTALLATION

Install in the reverse order of removal.

PASSENGER SIDE : Replacement

INFOID:0000000008140868

CAUTION:

- **Disconnect the 12V battery negative terminal or remove power circuit fuse while performing the operation to electric leakage.**
- **Never touch the glass surface of the bulb with bare hands or allow oil or grease to get on it to prevent damage to the bulb.**
- **Never touch the glass surface of the bulb with bare hands because the surface is very hot just after the lamp is turned OFF to prevent a burns.**
- **Leaving the bulb removed from housing for a long period of time can deteriorate performance of the lens and reflector (causing dirty or clouding). Always prepare a new bulb and have it on hand when replacing the bulb.**

FOOT LAMP BULB

1. Insert any appropriate tool into the gap between the lens to remove the lens.
2. Remove the bulb.

STEP LAMP

Exploded View

INFOID:0000000008140869

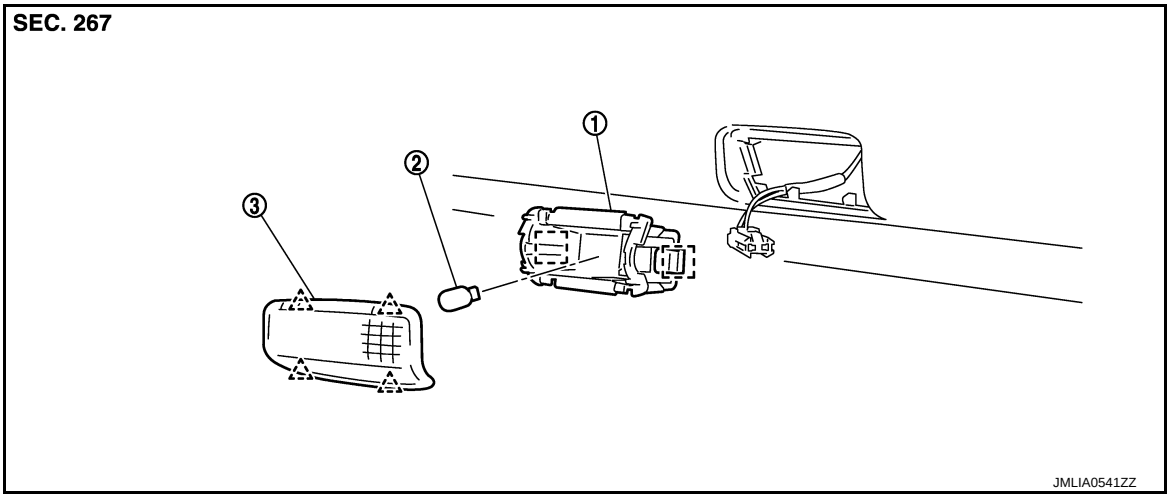

1. Step lamp case
2. Bulb
3. Lens

: Pawl

: Metal clip

Removal and Installation

INFOID:0000000008140870

REMOVAL

1. Insert any appropriate tool into the gap between the step lamp case and door finisher to remove step lamp case.
2. Disconnect step lamp harness connector.

INSTALLATION

Install in the reverse order of removal.

Replacement

INFOID:0000000008140871

CAUTION:

- **Disconnect the 12V battery negative terminal or remove power circuit fuse while performing the operation to electric leakage.**
- **Never touch the glass surface of the bulb with bare hands or allow oil or grease to get on it to prevent damage to the bulb.**
- **Never touch the glass surface of the bulb with bare hands because the surface is very hot just after the lamp is turned OFF to prevent a burns.**
- **Leaving the bulb removed from housing for a long period of time can deteriorate performance of the lens and reflector (causing dirty or clouding). Always prepare a new bulb and have it on hand when replacing the bulb.**

STEP LAMP BULB

1. Insert any appropriate tool into the gap between the lens to remove the lens.
2. Remove the bulb.

PERSONAL LAMP

Exploded View

INFOID:0000000008140872

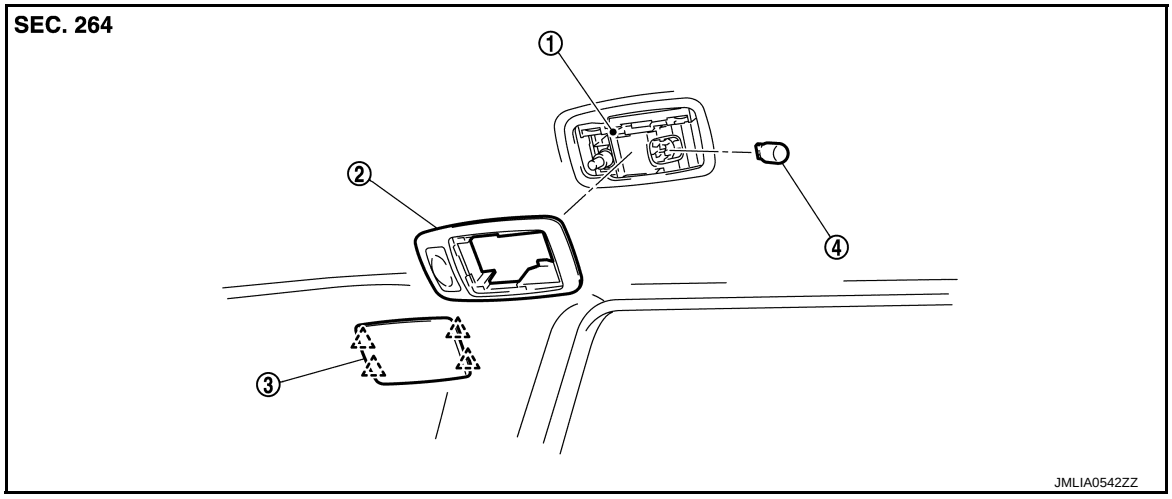

1. Personal lamp case
2. Personal lamp finisher
3. Lens
4. Bulb

: Pawl

CAUTION:
Replace the personal lamp case as a set (right and left). After removing the headlining assembly, remove the personal lamp case. Refer to INT-46, "Exploded View".

Removal and Installation

INFOID:0000000008140873

REMOVAL

1. Remove headlining assembly. Refer to INT-47, "Removal and Installation".
2. Insert any appropriate tool into the gap between the lens to remove the lens.
3. Press the pawls (A) on both sides in the direction shown by the arrow in the figure using appropriate tool, and then pull out the personal lamp finisher.

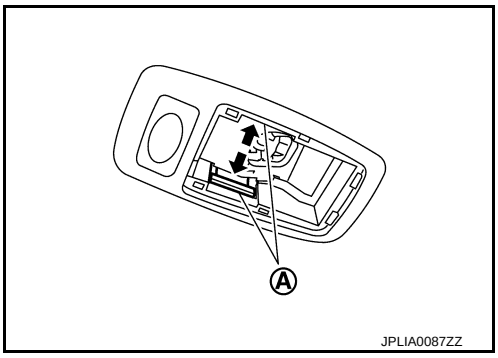

4. Remove personal lamp case from headlining assembly.

INSTALLATION

Press the personal lamp finisher to the headlining. Pull the personal lamp case pawls in the direction shown by the arrow in the figure using appropriate tool.

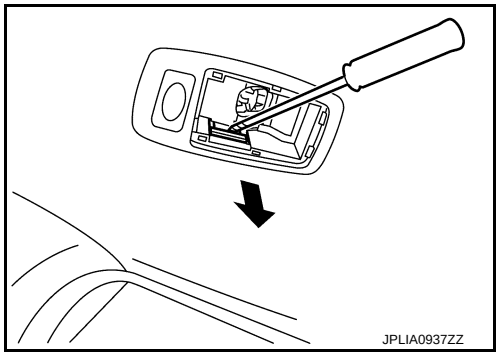

Replacement

INFOID:0000000008140874

CAUTION:

- **Disconnect the 12V battery negative terminal or remove power circuit fuse while performing the operation to electric leakage.**
- **Never touch the glass surface of the bulb with bare hands or allow oil or grease to get on it to prevent damage to the bulb.**
- **Never touch the glass surface of the bulb with bare hands because the surface is very hot just after the lamp is turned OFF to prevent a burns.**
- **Leaving the bulb removed from housing for a long period of time can deteriorate performance of the lens and reflector (causing dirty or clouding). Always prepare a new bulb and have it on hand when replacing the bulb.**

PERSONAL LAMP BLUB

1. Insert any appropriate tool into the gap between the lens to remove the lens.
2. Remove the bulb.

OUTSIDE HANDLE LAMP

Exploded View

INFOID:0000000008140875

Always replace outside handle lamp together with outside handle as a set, when replacing since outside handle lamp is integrated with outside handle. Refer to DLK-168, "OUTSIDE HANDLE : Removal and Installation".

TRUNK ROOM LAMP

Exploded View

INFOID:0000000008140876

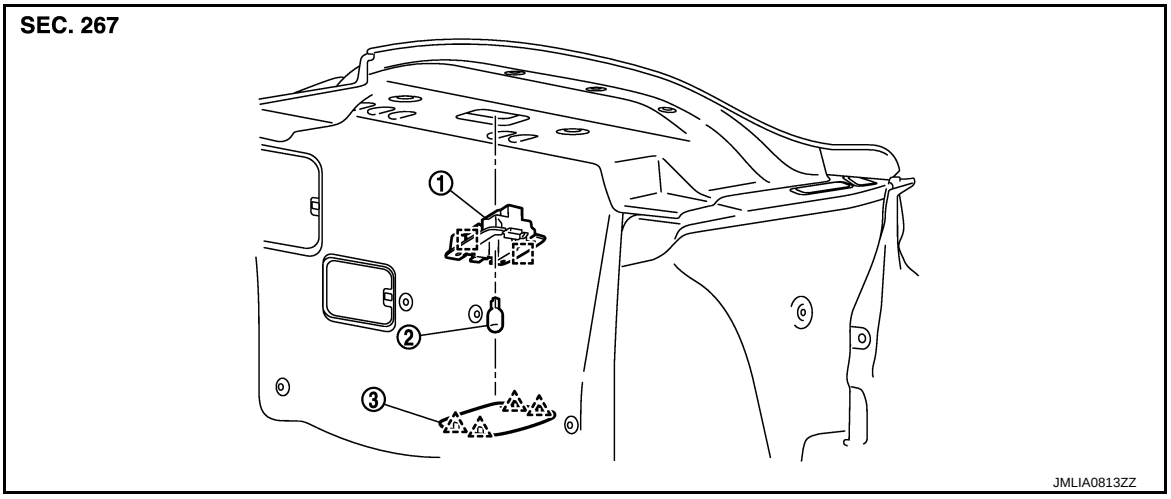

1. Trunk room lamp case
2. Bulb
3. Lens

: Pawl

: Metal clip

Removal and Installation

INFOID:0000000008140877

REMOVAL

1. Insert any appropriate tool into the gap between the trunk room lamp case and trunk finisher front to remove trunk room lamp case.
2. Disconnect trunk room lamp harness connector.

INSTALLATION

Install in the reverse order of removal.

Replacement

INFOID:0000000008140878

CAUTION:

- **Disconnect the 12V battery negative terminal or remove power circuit fuse while performing the operation to electric leakage.**
- **Never touch the glass surface of the bulb with bare hands or allow oil or grease to get on it to prevent damage to the bulb.**
- **Never touch the glass surface of the bulb with bare hands because the surface is very hot just after the lamp is turned OFF to prevent a burns.**
- **Leaving the bulb removed from housing for a long period of time can deteriorate performance of the lens and reflector (causing dirty or clouding). Always prepare a new bulb and have it on hand when replacing the bulb.**

TRUNK ROOM LAMP BULB

1. Insert any appropriate tool into the gap between the lens to remove the lens.

   : Pawl

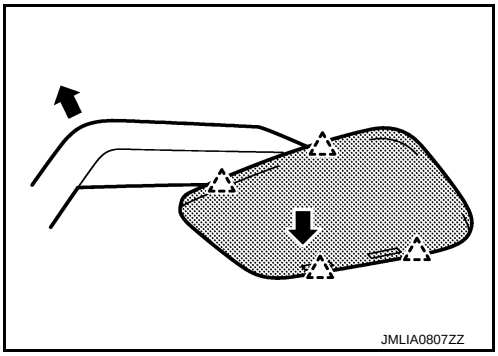

2. Remove the bulb.

SERVICE DATA AND SPECIFICATIONS (SDS)

SERVICE DATA AND SPECIFICATIONS (SDS)

bulb specifications

INFOID:0000000008140879

Item	Type	Wattage (W)
Push-button ignition switch illumination	LED	—
Map lamp	—	8
Console lamp (integrated into the map lamp assembly)	LED	—
Vanity mirror lamp	—	2
Cigarette lighter illumination (common use with ashtray illumination)	Wedge	1.1
Rear door ashtray illumination	Wedge	2
Glove box lamp	Wedge	2
Foot lamp	Wedge	3.4
Step lamp	Wedge	5
Personal lamp	Wedge	8
Outside handle lamp	LED	—
Trunk room lamp	Wedge	5